TOSHIBA

SERVICE MANUAL

LCD Color Television

42AV554D

Ver. 2.00

This model is classified as a green product (*1), as indicated by the underlined serial number. This Service Manual describes replacement parts for the green product. When repairing this green product, use the part(s) described in this manual and lead-free solder (*2).
For (*1) and (*2), refer to **GREEN PRODUCT PROCUREMENT** and **LEAD-FREE SOLDER**.

© TOSHIBA CORPORATION

IMPORTANT NOTICE

WARNING:

You are requested that you shall not modify or alter the information or data provided herein without prior written consent by Toshiba. Toshiba shall not be liable to anybody for any damages, losses, expenses or costs, if any, incurred in connection with or as a result of such modification or alteration.

THE INFORMATION OR DATA HEREIN SHALL BE PROVIDED "AS IS" WITHOUT ANY WARRANTY OF ANY KIND, EITHER EXPRESS OR IMPLIED WARRANTY OF MERCHANTABILITY AND FITNESS FOR A PARTICULAR PURPOSE.

Toshiba shall not be liable for any damages, losses, expenses or costs, if any, incurred in connection with or as a result of use of any information or data provided herein.

GREEN PRODUCT PROCUREMENT

The EC is actively promoting the WEEE & RoHS Directives that define standards for recycling and reuse of Waste Electrical and Electronic Equipment and for the Restriction of the use of certain Hazardous Substances. From July 1, 2006, the RoHS Directive will prohibit any marketing of new products containing the restricted substances.

Increasing attention is given to issues related to the global environmental. Toshiba Corporation recognizes environmental protection as a key management tasks, and is doing its utmost to enhance and improve the quality and scope of its environmental activities. In line with this, Toshiba proactively promotes Green Procurement, and seeks to purchase and use products, parts and materials that have low environmental impacts.

Green procurement of parts is not only confined to manufacture. The same green parts used in manufacture must also be used as replacement parts.

LEAD-FREE SOLDER

This product is manufactured using lead-free solder as a part of a movement within the consumer products industry at large to be environmentally responsible. Lead-free solder must be used in the servicing and repair of this product.

WARNING: This product is manufactured using lead free solder.
DO NOT USE LEAD BASED SOLDER TO REPAIR THIS PRODUCT!

The melting temperature of lead-free solder is higher than that of leaded solder by 86ºF to 104ºF (30ºC to 40ºC). Use of a soldering iron designed for lead-based solders to repair product made with lead-free solder may result in damage to the component and or PCB being soldered. Great care should be made to ensure high-quality soldering when servicing this product especially when soldering large components, through-hole pins, and on PCBs as the level of heat required to melt lead-free solder is high.

SAFETY INSTRUCTION

WARNING: BEFORE SERVICING THIS CHASSIS, READ THE "SAFETY PRECAUTION" AND "PRODUCT SAFETY NOTICE" INSTRUCTIONS BELOW.

Safety Precaution

WARNING: SERVICING SHOULD NOT BE ATTEMPTED BY ANYONE UNFAMILIAR WITH THE NECESSARY PRECAUTIONS ON THIS RECEIVER. THE FOLLOWING ARE THE NECESSARY PRECAUTIONS TO BE OBSERVED BEFORE SERVICING THIS CHASSIS.

1. An isolation transformer should be connected in the power line between the receiver and the AC line before any service is performed on the receiver.

2. Always disconnect the power plug before any disassembling of the product. It may result in electrical shock.

3. When replacing a chassis in the cabinet, always be certain that all the protective devices are put back in place, such as nonmetallic control knobs, insulating covers, shields, isolation resistor-capacitor network, etc.

4. Always keep tools, components of the product, etc away from the children, These items may cause injury to children.

5. Depending on the model, use an isolation transformer or wear suitable gloves when servicing with the power on, and disconnect the power plug to avoid electrical shock when replacing parts. In some cases, alternating current is also impressed in the chassis, so electrical shock is possible if the chassis is contacted with the power on.

6. Always use the replacement parts specified for the particular model when making repairs. The parts used in products require special safety characteristics such as inflammability, voltage resistance, etc. therefore, use only replacement parts that have these same characteristics. Use only the specified parts when the ⚠ mark is indicated in the circuit diagram or parts list.

7. Parts mounting and routing dressing of wirings should be the same as that used originally. For safety purposes, insulating materials such as isolation tube or tape are sometimes used and printed circuit boards are sometimes mounted floating. Also make sure that wirings is routed and clamped to avoid parts that generate heat and which use high voltage. Always follow the manufactured wiring routes / dressings.

8. Always ensure that all internal wirings are in accordance before re-assembling the external casing after a repairing completed. Do not allow internal wiring to be pinched by cabinets, panels, etc. Any error in reassembly or wiring can result in electrical leakage, flame, etc., and may be hazardous.

9. NEVER remodel the product in any way. Remodeling can result in improper operation, malfunction, or electrical leakage and flame, which may be hazardous.

10. Touch current check. (After completing the work, measure touch current to prevent an electric shock.)

    - Plug the AC cord directly into the AC outlet. Do NOT use an isolation transformer for this check.
    - Connect a measuring network for touch currents between each exposed metallic part on the set and a good earth ground such as a water pipe.

Annex D
(normative)

Measuring network for TOUCH CURRENTS

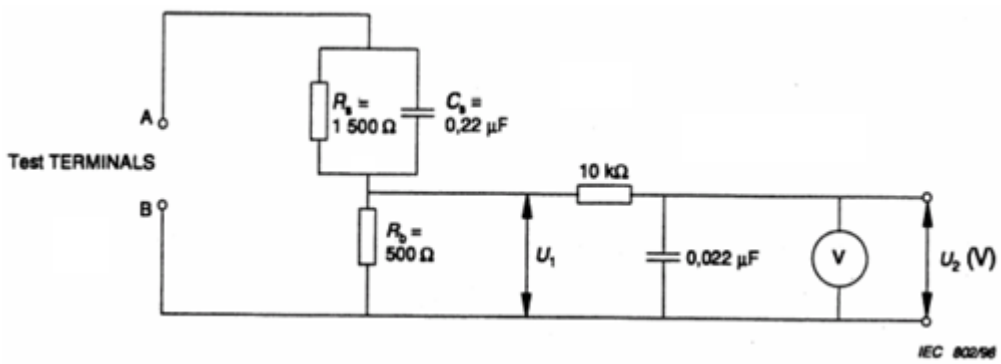

Resistance values in orms (Ω).

V: Voltmeter or oscilloscope
(r.m.s. or peak reading)

Input resistance : ≧ 1 MΩ
Input capacitance : ≦ 200 pF
Frequency range : 15 Hz to 1 MHz and d.c. respectively

Note: Appropriate measures should be taken to obtain the correct value in case of non sinusoidal waveforms.

The measuring instrument is calibrated by comparing the frequency factor of U_2 with the solid line in figure F.2 of IEC 60990 at various frequencies. A calibration curve is constructed showing the deviation of U_2 from the ideal curve as a function of frequency.

TOUCH CURRENT = U_2/500 (peak value).

- The potential at any point (TOUCH CURRENT) expressed as voltage U_1 and U_2 does not exceed the following value:

The part or contact of a TERMINAL is not HAZARDOUS LIVE if:

a) The open-circuit voltage should not exceed 35 V (peak) a.c. or 60 V d.c. or, if a) is not met.
b) The measurement of the TOUCH CURRENT shall be carried out in accordance with IEC 60990, with the measuring network described in **Annex D** of this standard.

The TOUCH CURRENT expressed as voltages U_1 and U_2, does not exceed the following values:
- for a.c. : U_1 = 35 V (peak) and U_2 = 0.35 V (peak);

- for d.c. : U_1 = 1.0 V

Note: The limit values of U_2 = 0.35 V (peak) for a.c. and U_1 = 1.0 V for d.c. correspond to the values 0.7 mA (peak) a.c. and 2.0 mA d.c.

Product Safety Notice

Many electrical and mechanical parts in this chassis have special safety-related characteristics. These characteristics are often passed unnoticed by a visual inspection and the protection afforded by them cannot necessarily be obtained by using replacement components rated for higher voltage, wattage, etc. Replacement parts which have these special safety characteristics are identified in this manual and its supplements; electrical components having such features are identified by the international hazard symbols on the schematic diagram and the parts list.
Before replacing any of these components, read the parts list in this manual carefully. The use of substitute replacement parts which do not have the same safety characteristics as specified in the parts list may create electrical shock, fire, or other hazards.

SAFETY INSTRUCTION

Handling the LCD Module

Safety Precaution

In the event that the screen is damaged or the liquid crystal (fluid) leaks, do not breathe in or drink this fluid.
Also, never touch this fluid. Such actions could cause toxicity or skin irritation. If this fluid should enter the mouth, rinse the mouth thoroughly with water. If the fluid should contact the skin or clothing, wipe off with alcohol, etc., and rinse thoroughly with water. If the fluid should enter the eyes, immediately rinse the eyes thoroughly with running water.

Precautions for Handling the LCD Module

CAUTION: The metal edges of the LCD module are sharp, handle it with care.

The LCD module can easily be damaged during disassembly or reassembly; therefore, always observe the following precautions when handling the module.

1. When attaching the LCD module to the LCD cover, position it appropriately and fasten at the position where the display can be viewed most conveniently.

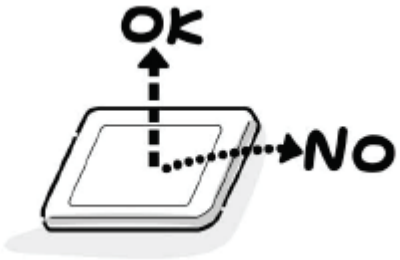

2. Carefully align the holes at all four corners of the LCD module with the corresponding holes in the LCD cover and fasten with screws. Do not strongly push on the module

because any impact can adversely affect the performance. Also use caution when handling the polarized screen because it can easily be damaged.

3. If the panel surface becomes soiled, wipe with cotton or a soft cloth. If this does not remove the soiling, breathe on the surface and then wipe again.
   If the panel surface is extremely solied, use a CRT cleaner as a cleaner. Wipe off the panel surface by drop the cleaner on the cloth. Do not drop the cleaner on the panel. Pay attention not to scratch the panel surface.

4. Leaving water or other fluids on the panel screen for an extended period of time can result in discoloration or stripes. Immediately remove any type of fluid from the screen.

5. Glass is used in the panel, so do not drop or strike with hard objects. Such actions can damage the panel.

6. CMOS-LSI circuitry is used in the LCD module, so avoid damage due to static electricity. When handling the module, use a wrist ground or anchor ground.

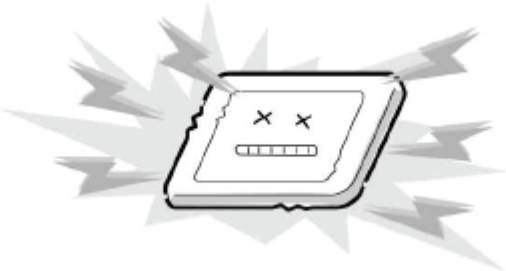

7. Do not expose the LCD module to direct sunlight or strong ultraviolet rays for an extended period of time.

8. Do not store the LCD module below the temperature conditions described in the specifications. Failure to do so could result in freezing of the liquid crystal due to cold air or loss of resilience or other damage.

9. Do not disassemble the LCD module. Such actions could result in improper operation.

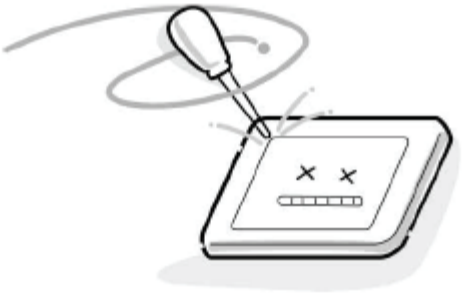

10. When transporting the LCD module, do not use packing containing epoxy resin (amine) or silicon resin (alcohol or oxim). The gas generated by these materials can cause loss of polarity.

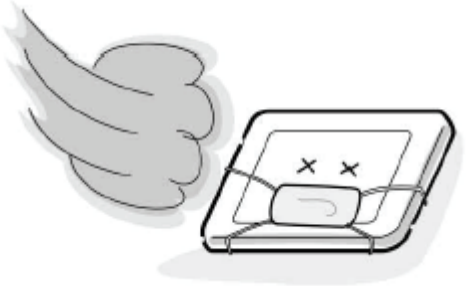

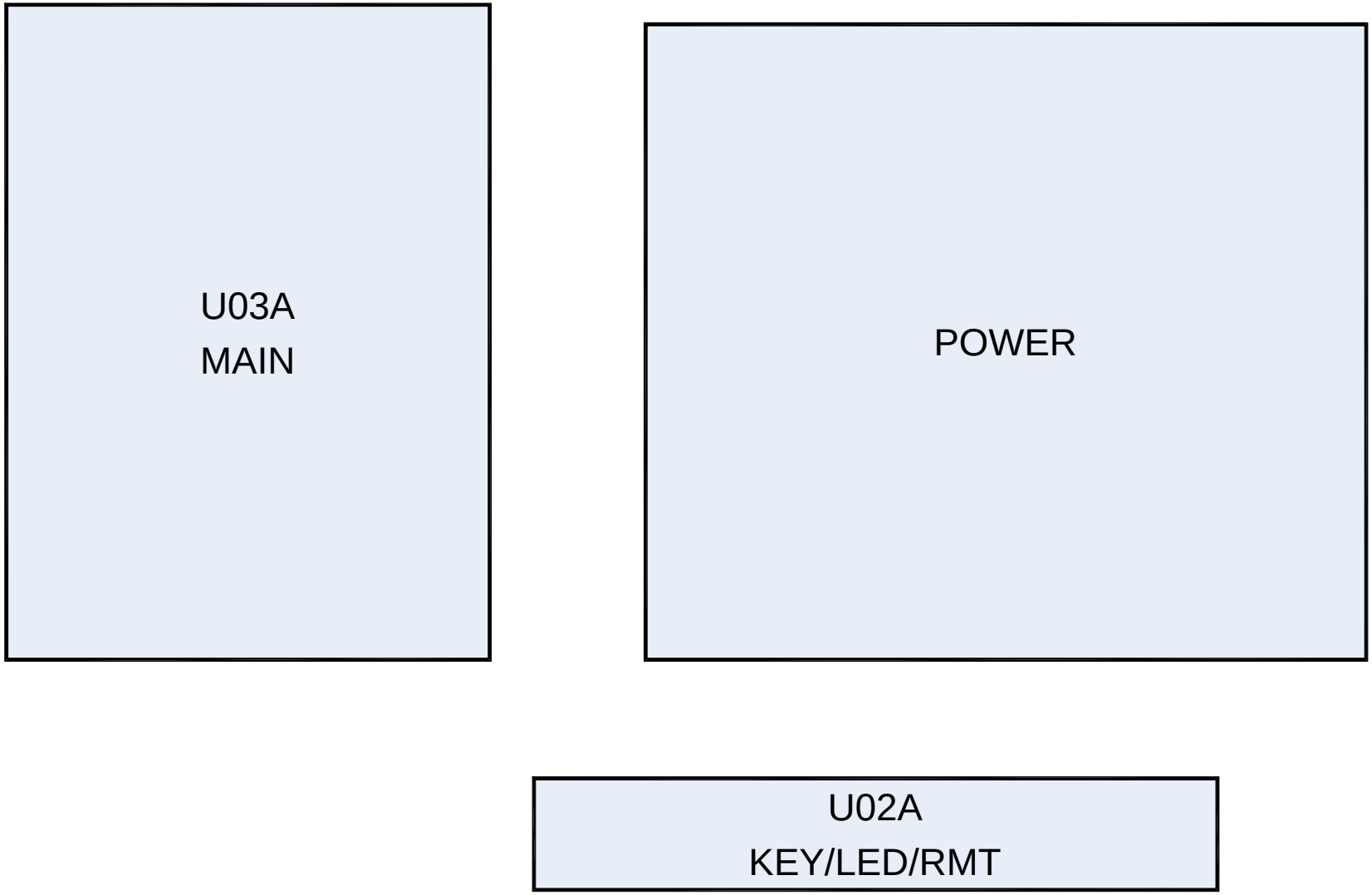
U03A
MAIN
POWER
U02A
KEY/LED/RMT

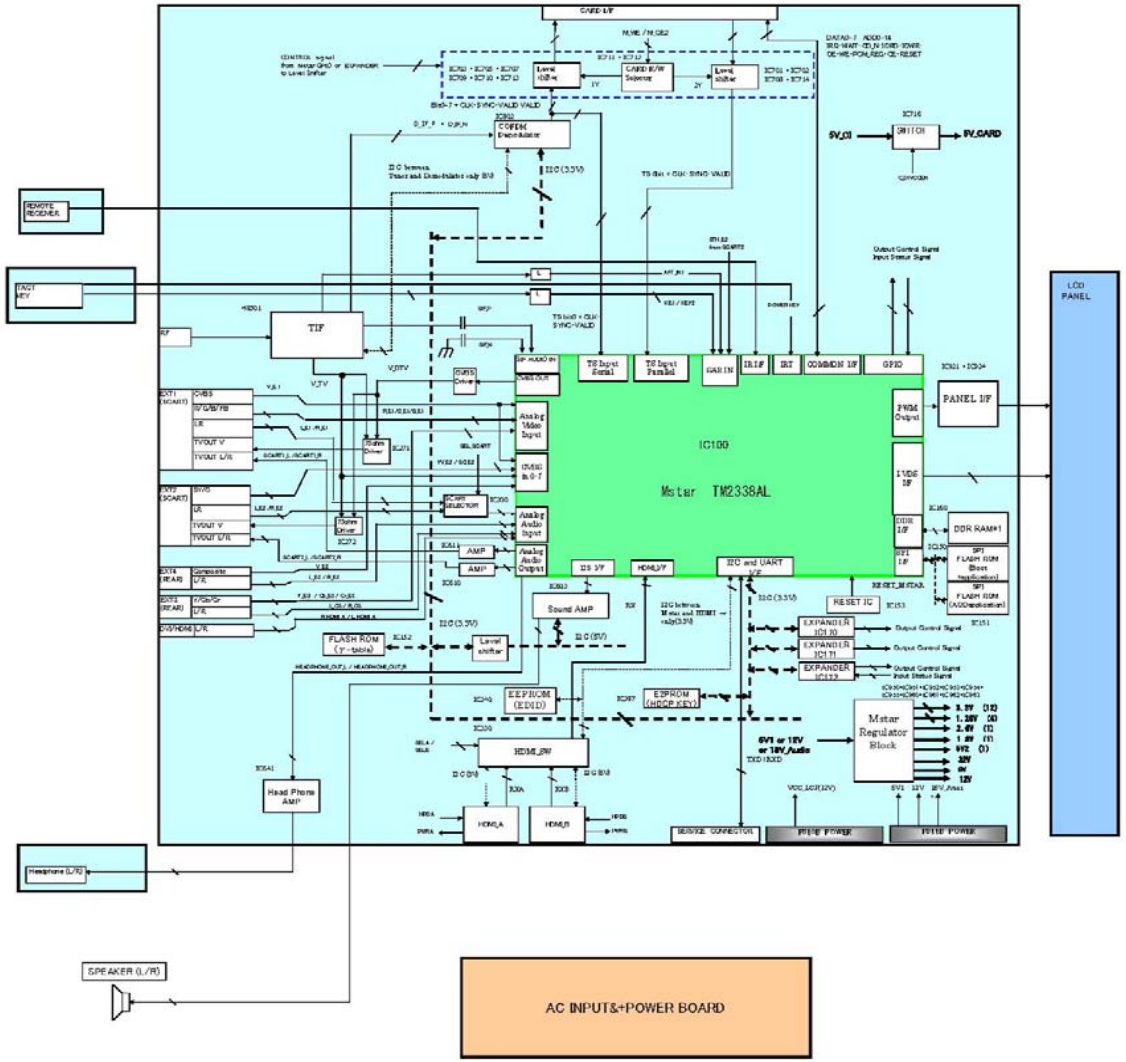

USER SELECT		Mstar_X_Z1
	(選擇)	NAME
RF1	V	V_TV
SCART1(V)	V	V_E1
SCART1(RGB)	R	R_E1
	G	G_E1
	B	B_E1
SCART2(V)	V	YV_E2
SCART2(S)	Y	YV_E2
	C	SC_E2
VIDEO2(V)	V	V_E3
VIDEO2(Y/Cb/Cr)	Cr	Y_E3
	Y	Cb_E3
	Cb	Cr_E3

[5V2]
IC960: 5V2

[3V]
IC961: 3V

[9V]
IC962: 9V

[VDD_Audio
IC963: 12V

[3.3V]
IC950: +3.3V_HDMI
IC951: +3.3V_CARD
IC952: +3.3V_VDDP
+3.3V_VDD_LPLL
+3.3V_D
+3.3V_AVDD_MEMPLL
+3.3V_AVDD_ADC
+3.3V_AVDD_SIF
+3.3V_AVDD_AU
+3.3V_VDD_MPLL
+3.3V_AVDD_DTG

[1.2V]
IC953: +1.2V_AVDDL_DVI
+1.2V_CORE

[2.5V]
IC954: +2.5V_DDR

[1.8V]
IC955: +1.8V_DEMOD

[5V]
5V2→ FL702 → 5V_CI

AC INPUT&+POWER BOARD

SCHEMATIC DIAGRAM

Precaution

WARNING: BEFORE SERVICING THIS CHASSIS, READ THE "X-RAY RADIATION PRECAUTION" FOR DIRECT VIEW CTV ONLY, "SAFETY PRECAUTION" AND "PRODUCT SAFETY NOTICE" OF THIS MANUAL.

CAUTION: The international hazard symbols "⚠" in the schematic diagram and the parts list designate components which have special characteristics important for safety and should be replaced only with types identical to those in the original circuit or specified in the parts list.

The mounting position of replacements is to be identical with originals. Before replacing any of these components, read carefully the SAFETY PRECAUTION and PRODUCT SAFETY NOTICE.

Do not degrade the safety of the receiver through improper servicing.

Note:

1. RESISTOR
   Resistance is shown in ohm [K=1,000, M=1,000,000]. All resistors are 1/6 W and 5 % tolerance carbon resistor, unless otherwise noted as the following marks.

   1/2R : Metal or Metal oxide of 1/2 watt
   1/2S : Carbon composition of 1/2 watt
   1RF : Fuse resistor of 1 watt
   10 W : Cement of 10 watt
   K : ±10 %
   G : ±2 %
   F : ±1 %

2. CAPACITOR

Unless otherwise noted in schematic, all capacitor values less than 1 are expressed in µF, and the values more than 1 in pF.
All capacitors are ceramic 50 V, unless otherwise noted as the following marks.

+ = Electrolytic capacitor
Ⓜ = Mylar capacitor

3. The parts indicated with "⚠" have special characteristics, and should be replaced with identical parts only.

4. Voltages read with DIGITAL MULTI-METER from point indicated to chassis ground, using a color bar signal with all controls at normal, line voltage at nominal AC volts.

5. Waveforms are taken receiving color bar signal with enough sensitivity.

6. Voltage reading shown are nominal values and may vary ±20 % except H.V.

for AV505D SERIES

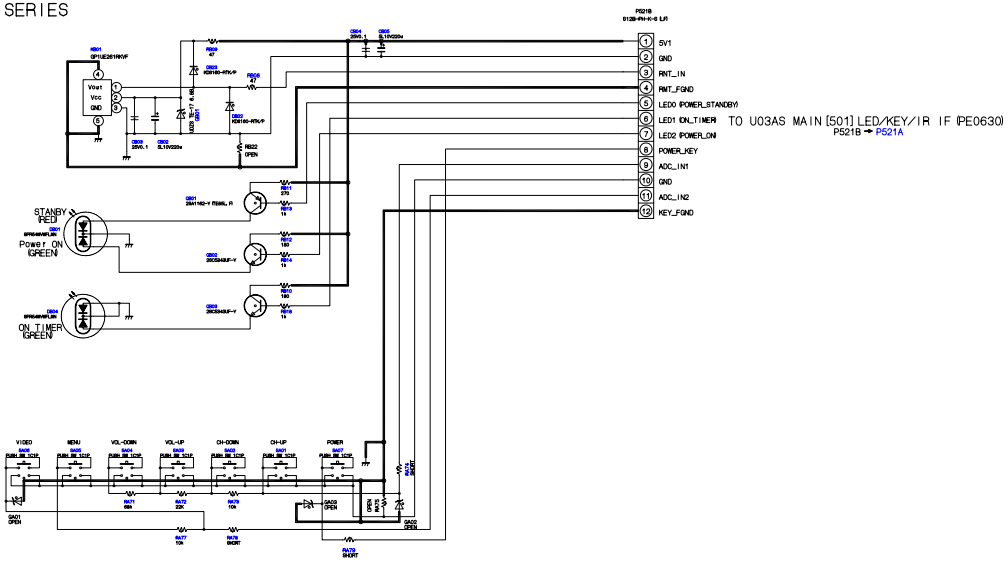

U02A KEY/LED/RMT [8] KEY & LED (PE0491)

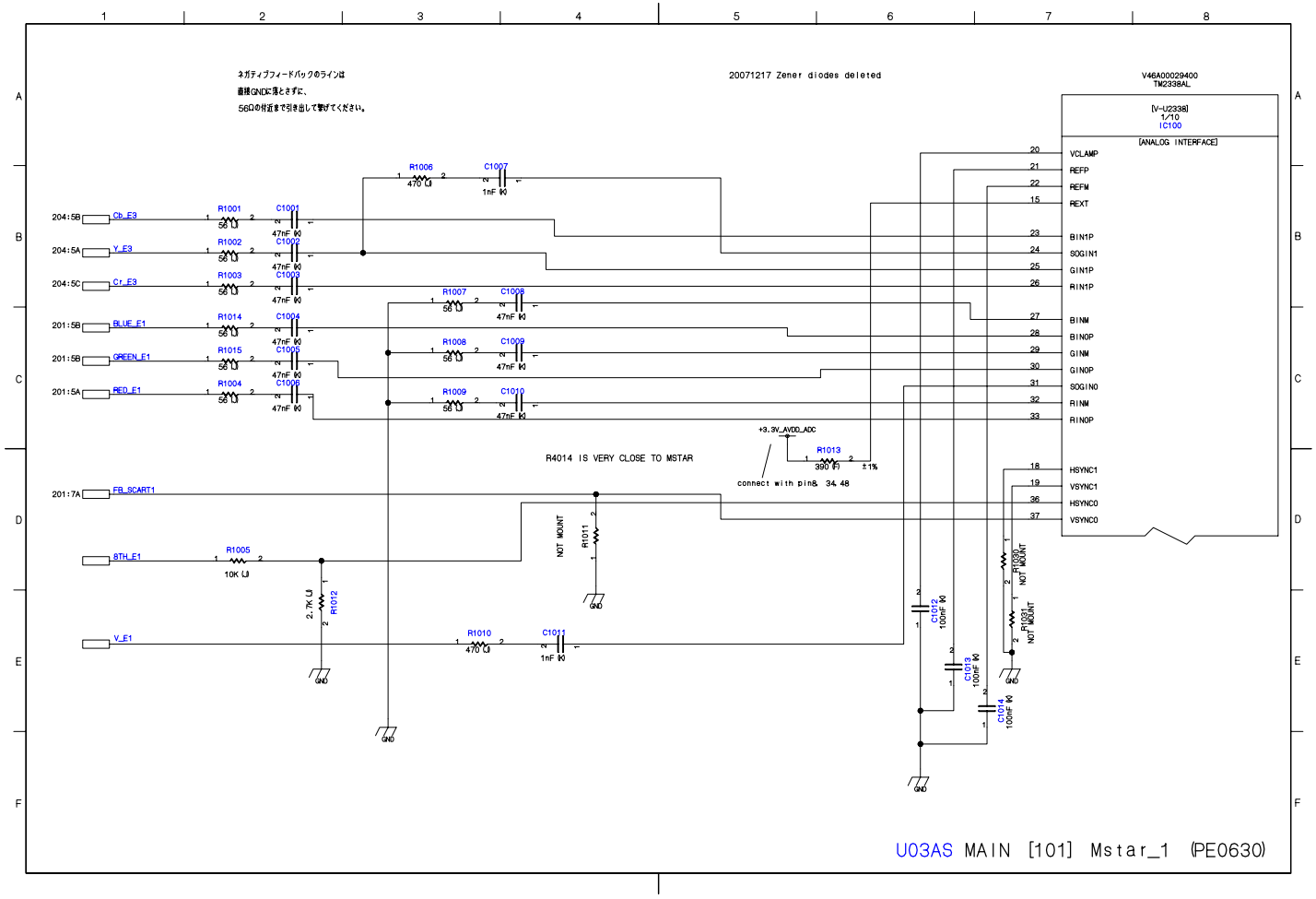

U03AS MAIN [101] Mstar_1 (PE0630)

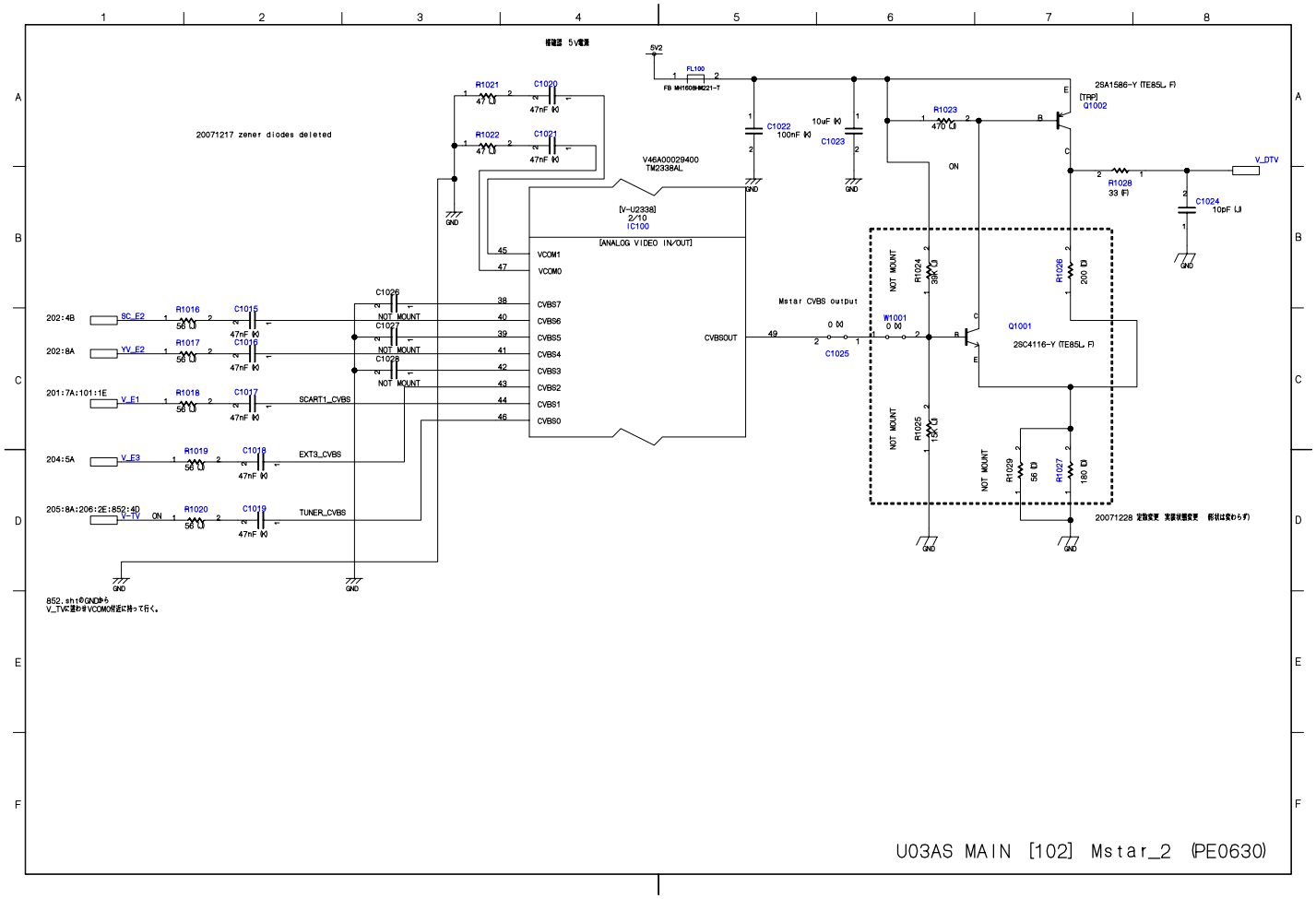

U03AS MAIN [102] Mstar_2 (PE0630)

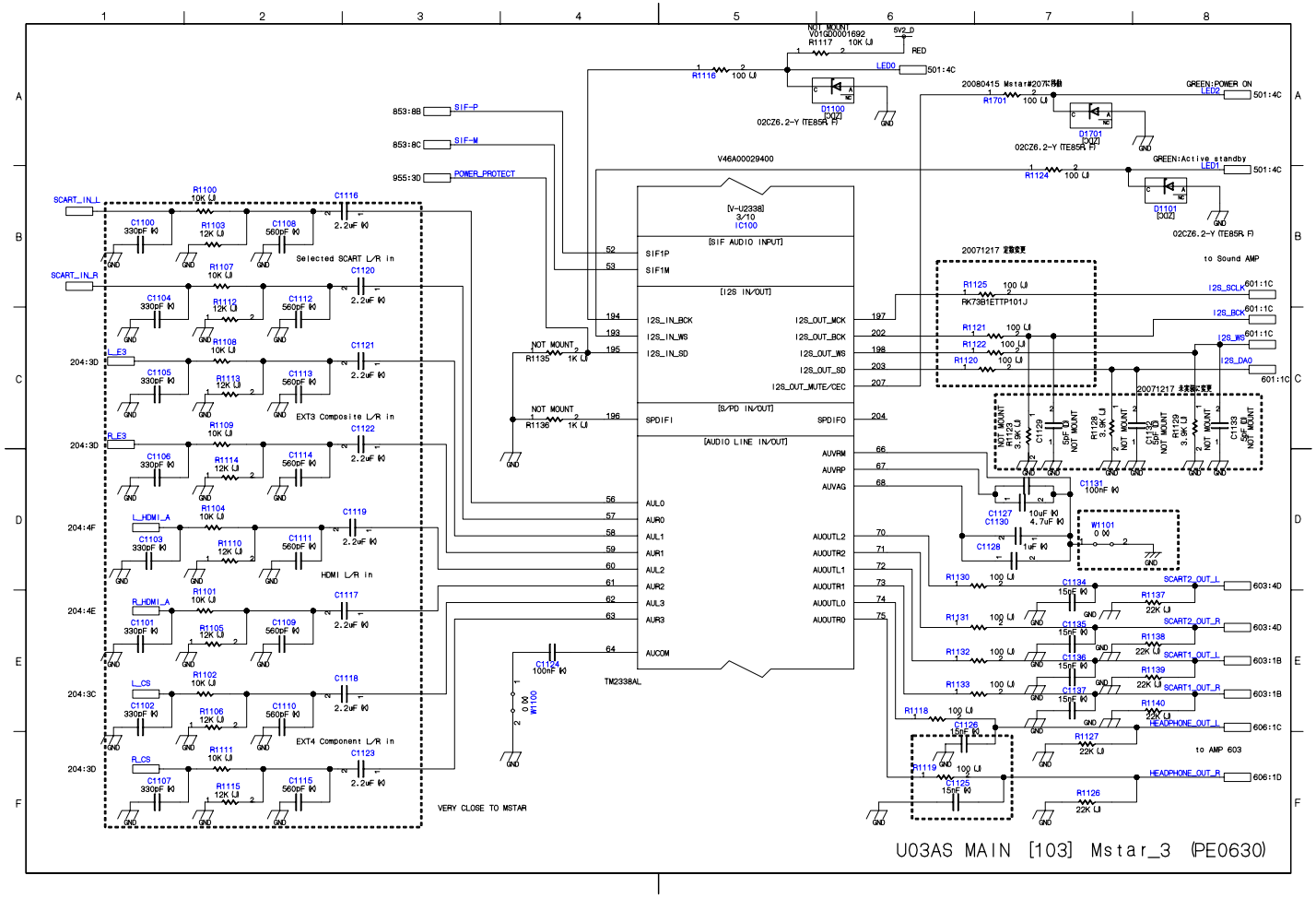
U03AS MAIN [103] Mstar_3 (PE0630)
V46A00029400
[V-U2338]
3/10
IC100
[SIF AUDIO INPUT]
SIF1P
SIF1M
[I2S IN/OUT]
I2S_IN_BCK
I2S_IN_WS
I2S_IN_SD
I2S_OUT_MCK
I2S_OUT_BCK
I2S_OUT_WS
I2S_OUT_SD
I2S_OUT_MUTE/CEC
[S/PD IN/OUT]
SPDIFI
SPDIFO
[AUDIO LINE IN/OUT]
AUVRM
AUVRP
AUVAG
AUL0
AUR0
AUL1
AUR1
AUL2
AUR2
AUL3
AUR3
AUCOM
AUOUTL2
AUOUTR2
AUOUTL1
AUOUTR1
AUOUTL0
AUOUTR0
TM2338AL
853:8B
SIF-P
853:8C
SIF-M
955:3D
POWER_PROTECT
SCART_IN_L
SCART_IN_R
L_E3
R_E3
L_HDMI_A
R_HDMI_A
L_CS
R_CS
204:3D
204:4F
204:4E
204:3C
Selected SCART L/R in
EXT3 Composite L/R in
HDMI L/R in
EXT4 Component L/R in
VERY CLOSE TO MSTAR
NOT MOUNT
R1135 1K
R1136 1K
C1124 100nF
W1100 0.0Ω
5V2_D
R1117 10K
R1116 100
LED0
501:4C
RED
D1100
02CZ6.2-Y (TE85R F)
20080415 Mstar#207不採用
R1701 100
D1701
GREEN:POWER ON
LED2
GREEN:Active standby
LED1
R1124 100
D1101
20071217 定数変更
R1125 100
RK73B1ETTP101J
R1121 100
R1122 100
R1120 100
I2S_SCLK
I2S_BCK
I2S_WS
I2S_DA0
601:1C
to Sound AMP
R1123 3.3K
C1129 5pF
R1128 3.9K
C1132 5pF
R1129 3.9K
C1133 5pF
C1131 100nF
C1127 10uF
C1130 4.7uF
C1128 1uF
W1101 0.0Ω
R1130 100
R1131 100
R1132 100
R1133 100
R1118 100
R1119 100
C1126 15pF
C1125 15pF
C1134 15pF
C1135 15pF
C1136 15pF
C1137 15pF
R1137 22K
R1138 22K
R1139 22K
R1140 22K
R1127 22K
R1126 22K
SCART2_OUT_L
SCART2_OUT_R
SCART1_OUT_L
SCART1_OUT_R
HEADPHONE_OUT_L
HEADPHONE_OUT_R
603:4D
603:1B
606:1C
606:1D
to AMP 603

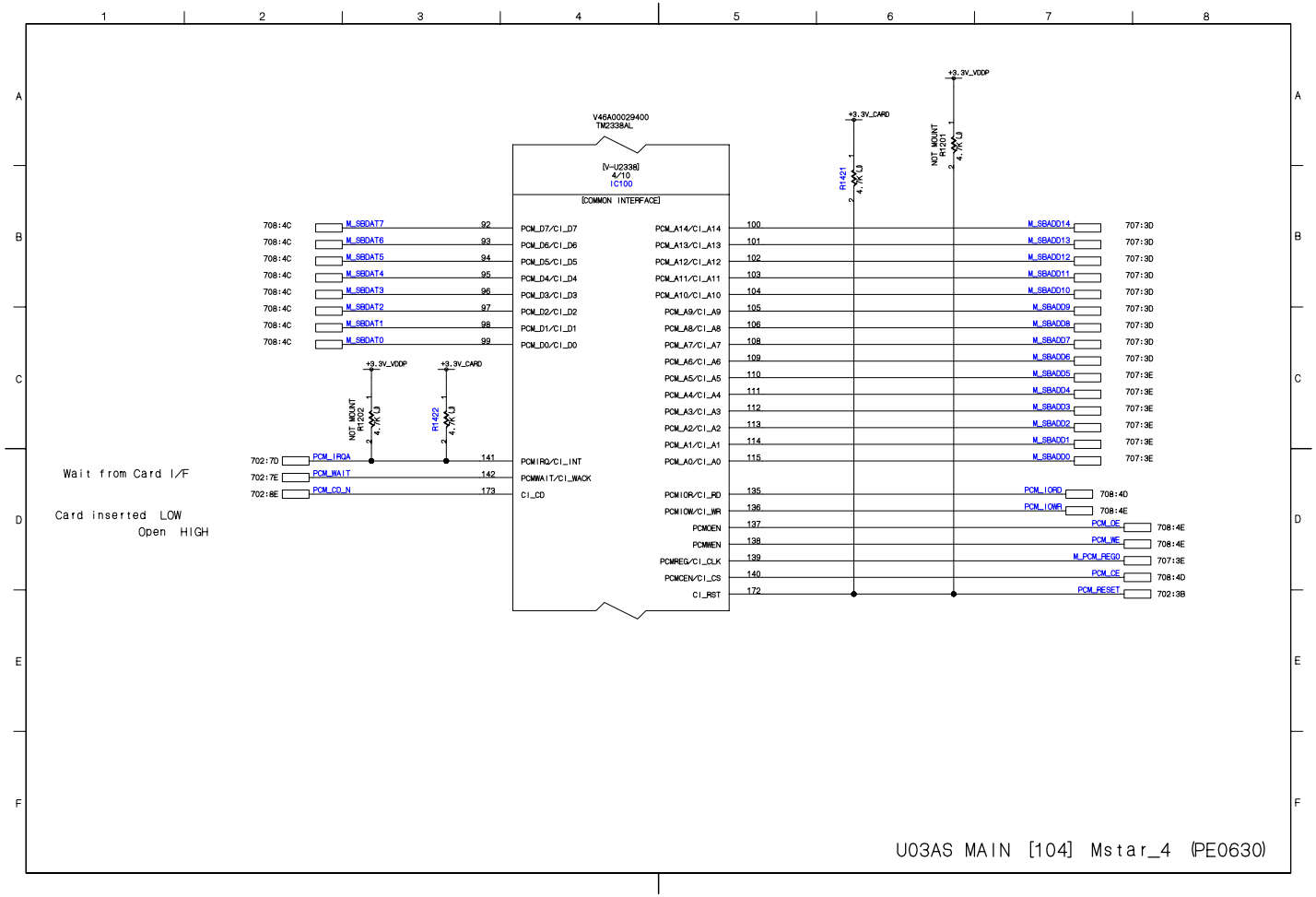

U03AS MAIN [104] Mstar_4 (PE0630)

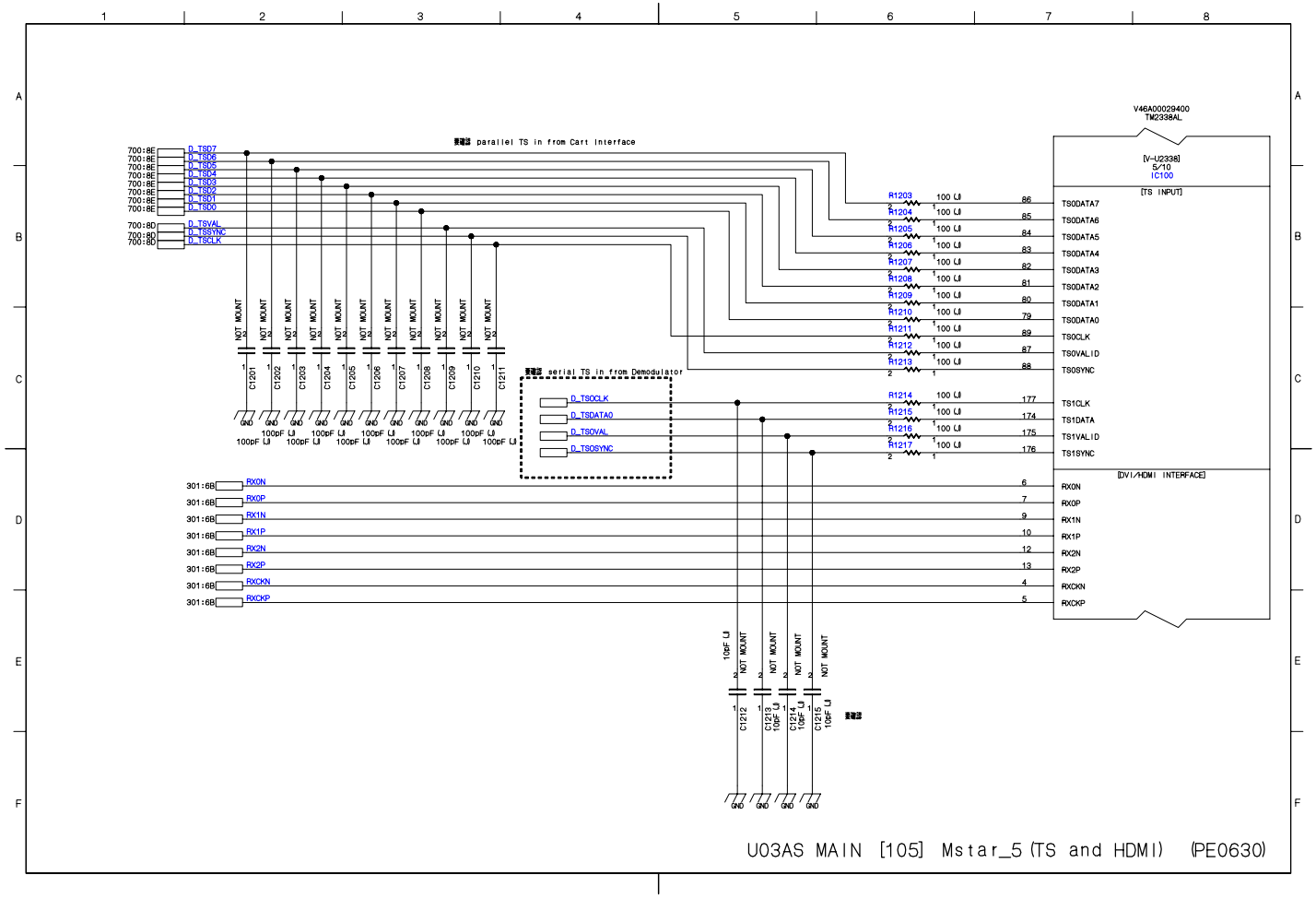

U03AS MAIN [105] Mstar_5 (TS and HDMI) (PE0630)

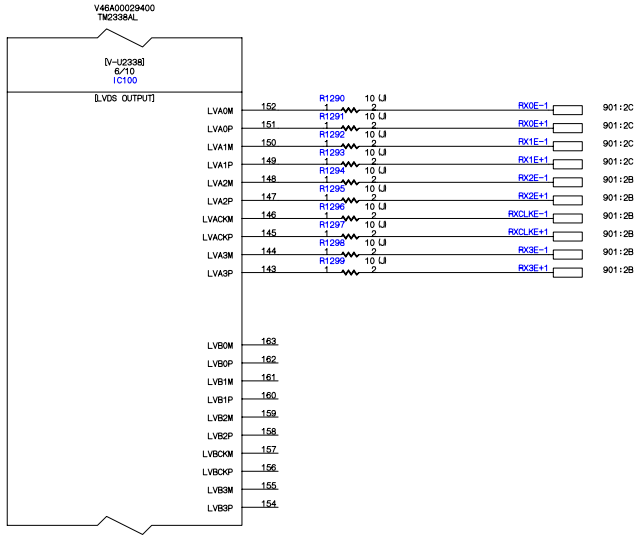

A/B-link swap (for dual-link only)

U03AS MAIN [106] Mstar LVDS_OUT (PE0630)

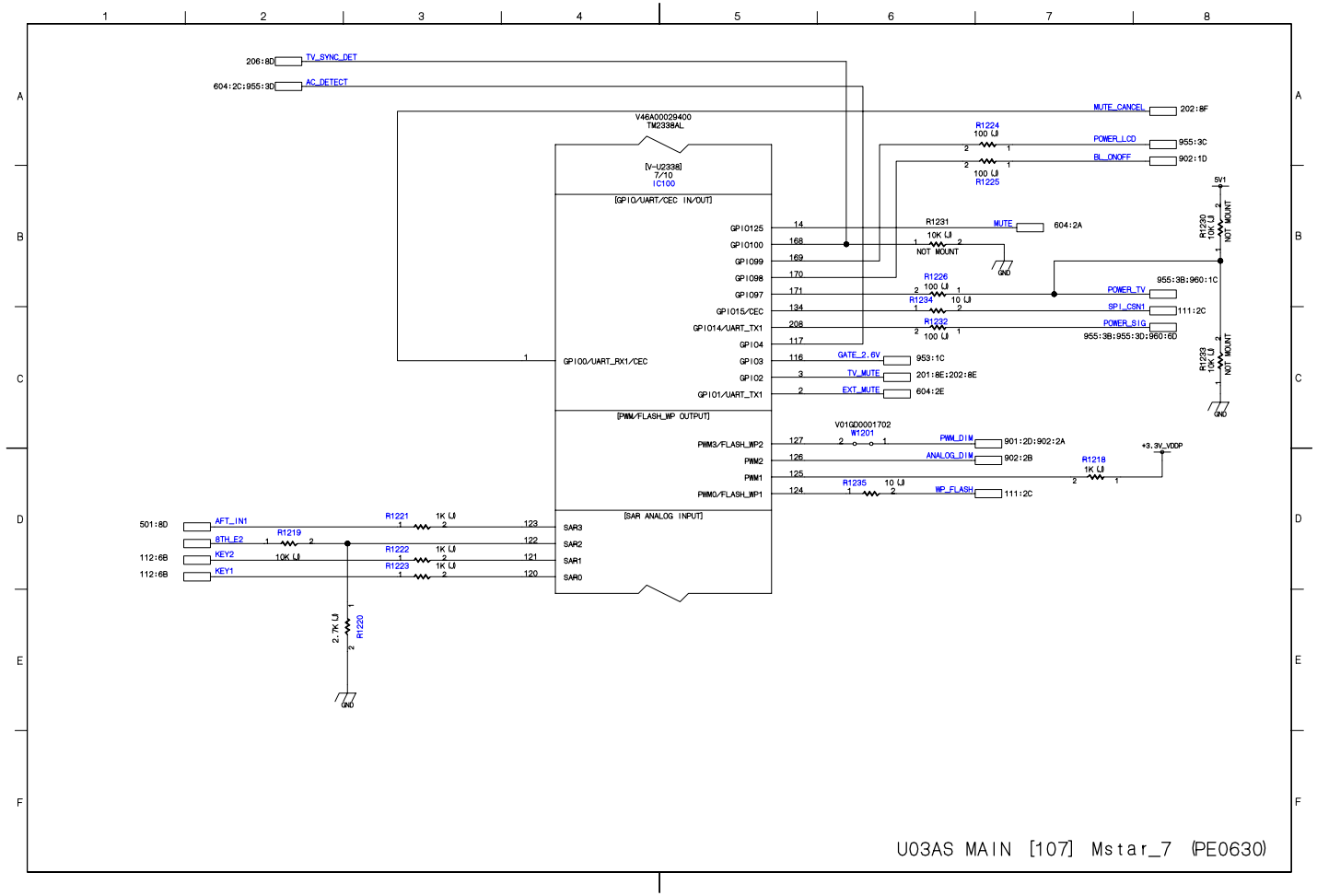

U03AS MAIN [107] Mstar_7 (PE0630)

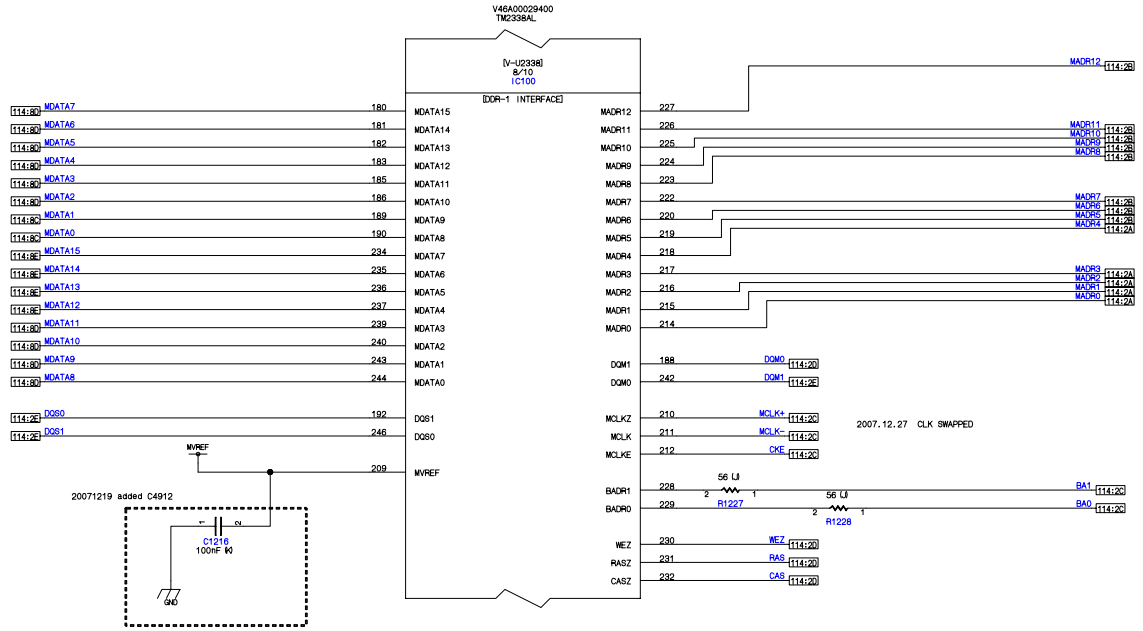

U03AS MAIN [108] Mstar_8 (PE0630)

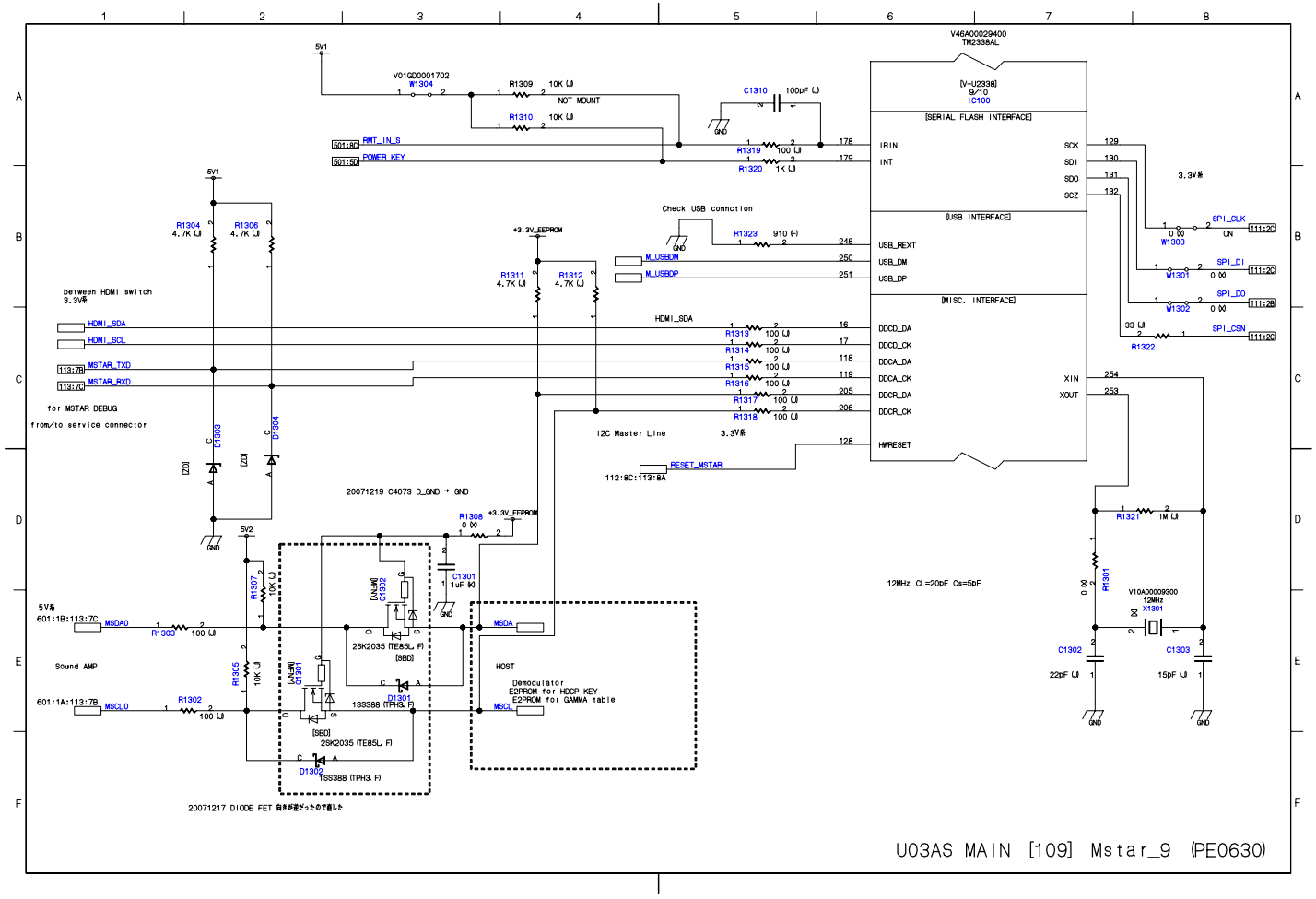
V46A00029400
TM2338AL
[V-U2338]
9/10
IC100
[SERIAL FLASH INTERFACE]
[USB INTERFACE]
[MISC. INTERFACE]
IRIN
INT
SCK
SDI
SDO
SCZ
USB_REXT
USB_DM
USB_DP
DDCD_DA
DDCD_CK
DDCA_DA
DDCA_CK
DDCR_DA
DDCR_CK
HWRESET
XIN
XOUT
V01GD0001702
W1304
R1309 10K (J)
NOT MOUNT
R1310 10K (J)
C1310 100pF (J)
R1319 100 (J)
R1320 1K (J)
501:8C RMT_IN_S
501:5D POWER_KEY
Check USB connction
R1323 910 (F)
M_USBDM
M_USBDP
HDMI_SDA
R1313 100 (J)
R1314 100 (J)
R1315 100 (J)
R1316 100 (J)
R1317 100 (J)
R1318 100 (J)
I2C Master Line
3.3V系
RESET_MSTAR
112:8C:113:8A
SPI_CLK
SPI_DI
SPI_DO
SPI_CSN
111:2C
111:2B
W1303
W1301
W1302
R1322
33 (J)
R1321 1M (J)
R1301 0 (X)
V10A00009300
12MHz
X1301
C1302 22pF (J)
C1303 15pF (J)
12MHz CL=20pF Cs=5pF
R1304 4.7K (J)
R1306 4.7K (J)
R1311 4.7K (J)
R1312 4.7K (J)
+3.3V_EEPROM
between HDMI switch
3.3V系
HDMI_SDA
HDMI_SCL
113:7B MSTAR_TXD
113:7C MSTAR_RXD
for MSTAR DEBUG
from/to service connector
D1303
D1304
[ZD]
20071219 C4073 D_GND → GND
R1308 0 (X)
C1301 1uF (K)
R1307 10K (J)
R1305 10K (J)
5V系
601:1B:113:7C MSDA0
R1303 100 (J)
Sound AMP
601:1A:113:7B MSCL0
R1302 100 (J)
[ANA]
Q1302
Q1301
2SK2035 (TE85L, F)
[SBD]
D1301
1SS388 (TPH3, F)
D1302
HOST
Demodulator
E2PROM for HDCP KEY
E2PROM for GAMMA table
MSDA
MSCL
20071217 DIODE FET 向きが逆だったので直した
U03AS MAIN [109] Mstar_9 (PE0630)

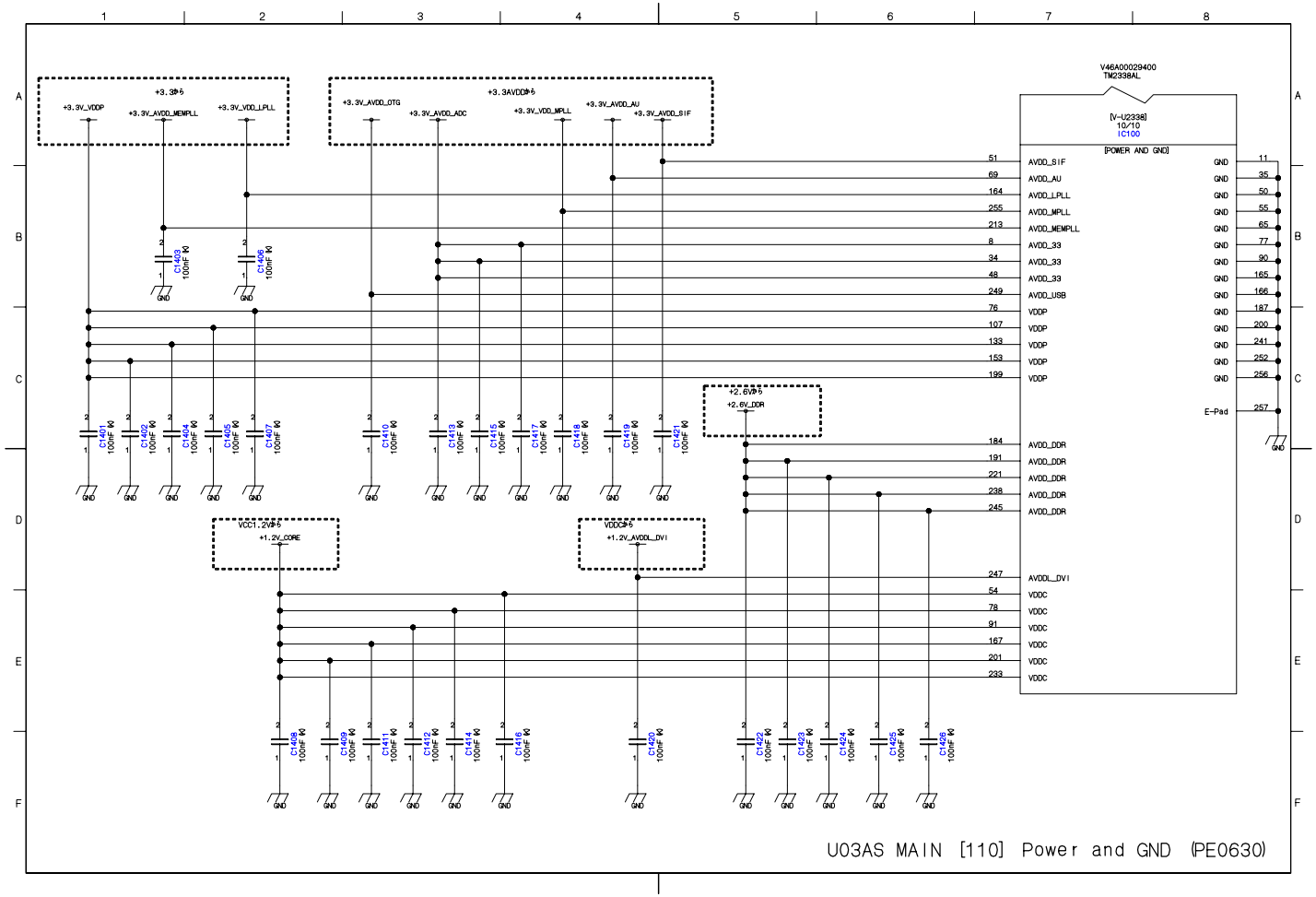

U03AS MAIN [110] Power and GND (PE0630)

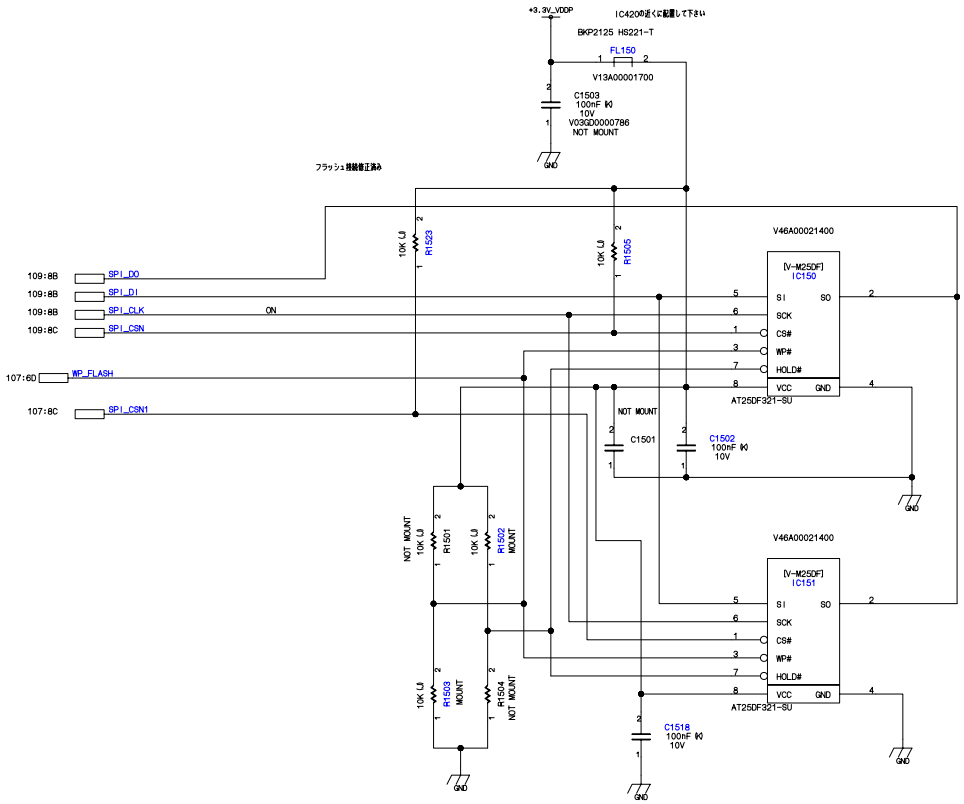

U03AS MAIN [111] FLASH MEMORY (PE0630)

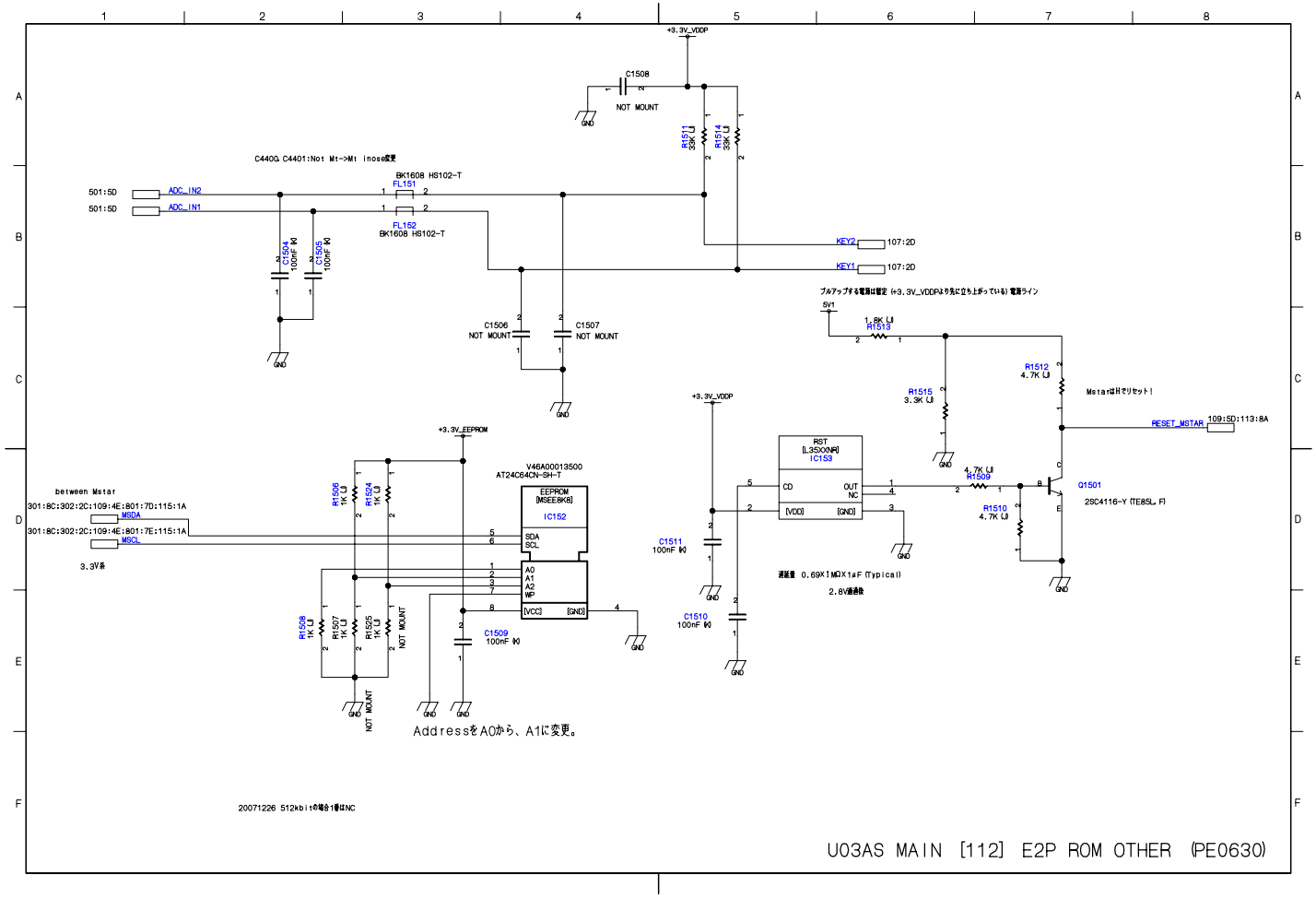
+3.3V_VDDP
C1508
NOT MOUNT
R1511 33K
R1514 33K
C440Ω C4401:Not Mt->Mt inose変更
BK1608 HS102-T
FL151
FL152
BK1608 HS102-T
501:5D
ADC_IN2
501:5D
ADC_IN1
C1504 100nF
C1505 100nF
KEY2
107:2D
KEY1
107:2D
C1506 NOT MOUNT
C1507 NOT MOUNT
プルアップする電源は固定 (+3.3V_VDDPより先に立ち上がっている) 電源ライン
5V1
R1513 1.8K
R1512 4.7K
R1515 3.3K
MstarはHでリセット!
RESET_MSTAR
109:5D:113:8A
+3.3V_VDDP
+3.3V_EEPROM
RST [L35XXNR] IC153
CD
OUT
NC
[VDD]
[GND]
4.7K R1509
R1510 4.7K
Q1501
2SC4116-Y (TE85L, F)
C1511 100nF
C1510 100nF
遅延量 0.69X1MΩX1μF (Typical)
2.8V通過後
V46A00013500
AT24C64CN-SH-T
EEPROM [MSEEBK8]
IC152
SDA
SCL
A0
A1
A2
WP
[VCC]
[GND]
R1506 1K
R1504 1K
between Mstar
301:8C:302:2C:109:4E:801:7D:115:1A
MSDA
301:8C:302:2C:109:4E:801:7E:115:1A
MSCL
3.3V系
R1508 1K
R1507 1K
R1525 1K
NOT MOUNT
C1509 100nF
AddressをA0から、A1に変更。
20071226 512kbitの場合1番はNC
U03AS MAIN [112] E2P ROM OTHER (PE0630)

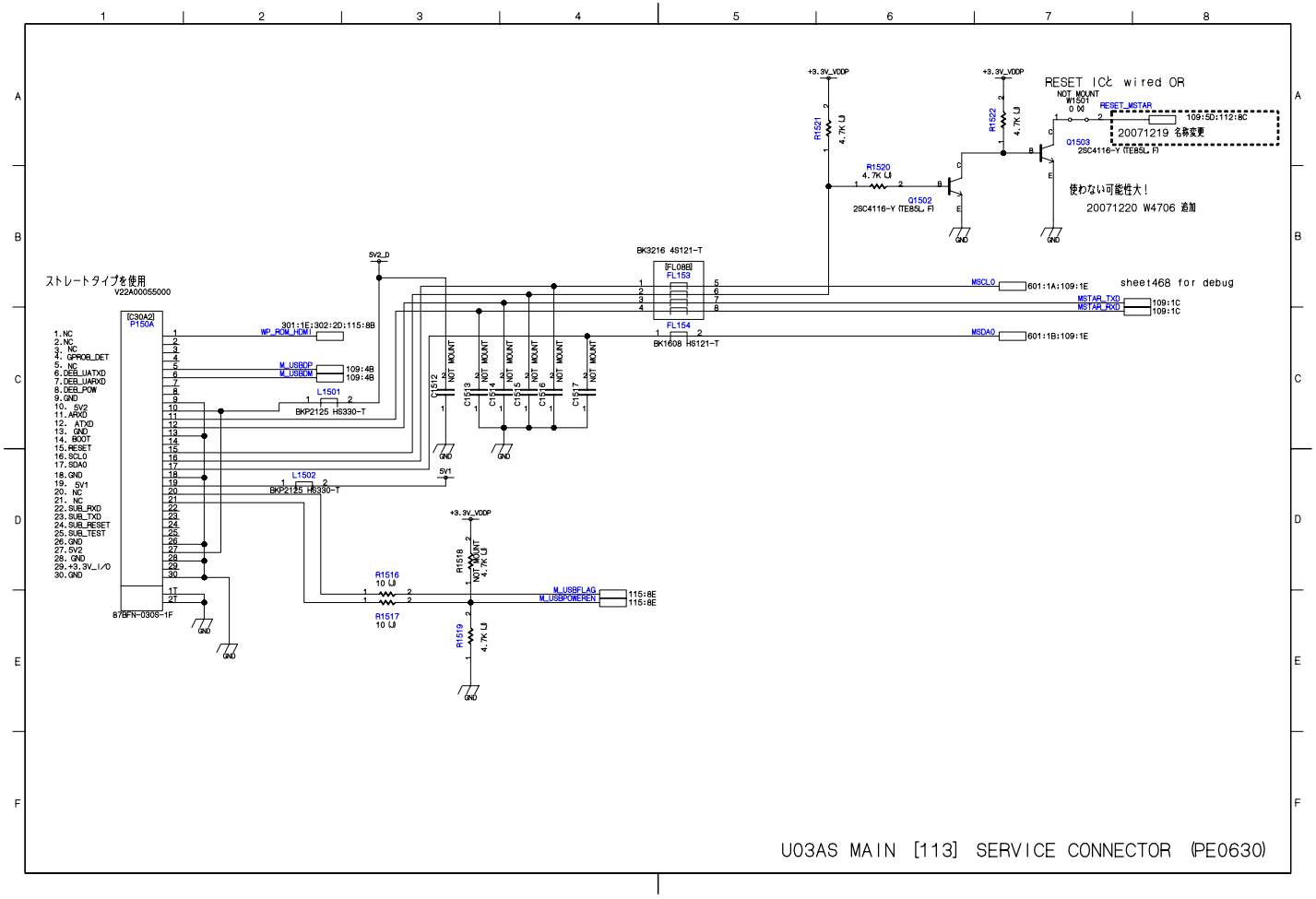

U03AS MAIN [113] SERVICE CONNECTOR (PE0630)

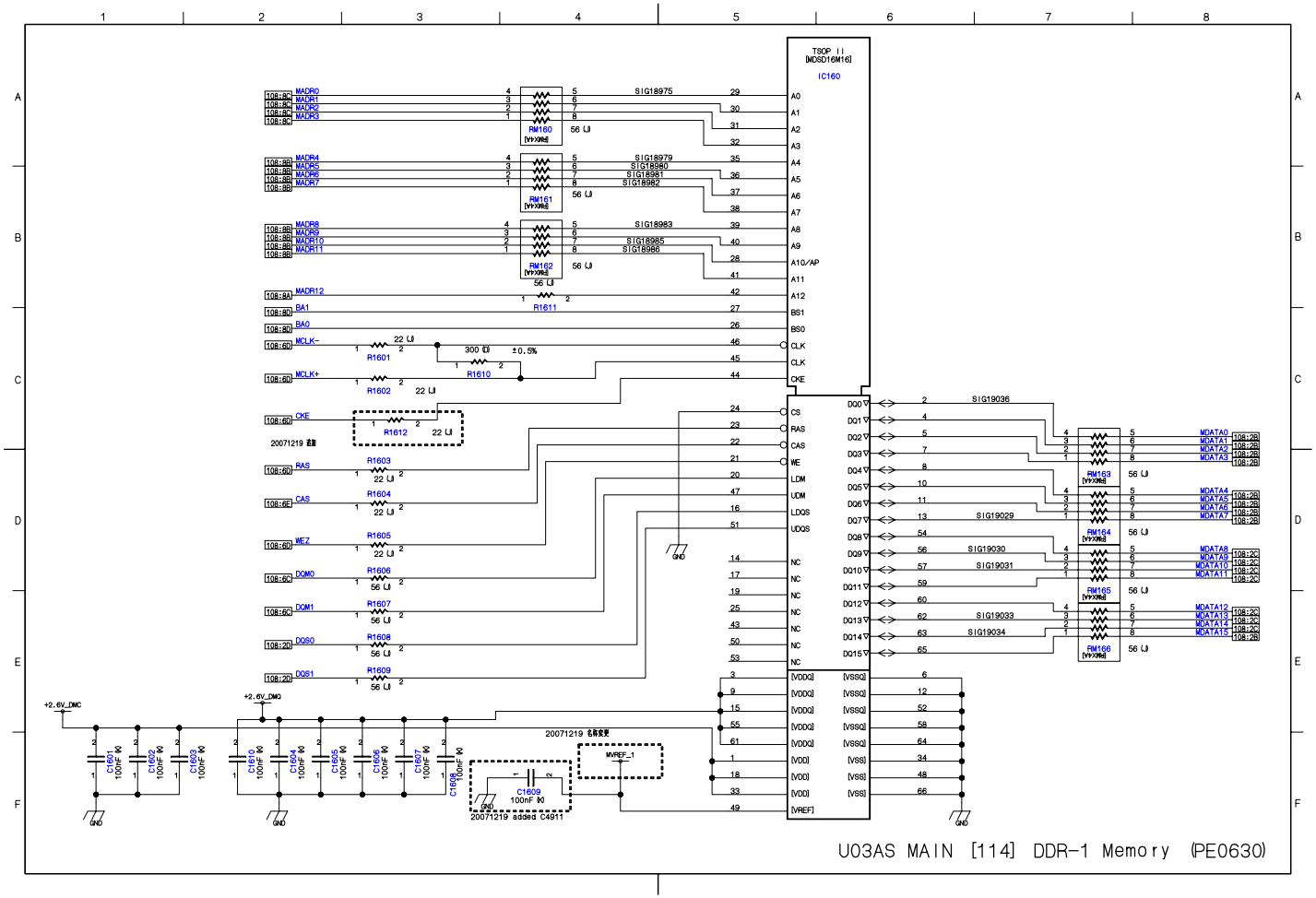
TSOP II
[MOSD16M16]
IC160
MADR0
MADR1
MADR2
MADR3
MADR4
MADR5
MADR6
MADR7
MADR8
MADR9
MADR10
MADR11
MADR12
BA1
BA0
MCLK-
MCLK+
CKE
RAS
CAS
WEZ
DQM0
DQM1
DQS0
DQS1
RM160
RM161
RM162
RM163
RM164
RM165
RM166
56 Ω
R1611
R1601
R1610
R1602
R1612
R1603
R1604
R1605
R1606
R1607
R1608
R1609
22 Ω
300 Ω
±0.5%
20071219 追加
SIG18975
SIG18979
SIG18980
SIG18981
SIG18982
SIG18983
SIG18985
SIG18986
SIG19036
SIG19029
SIG19030
SIG19031
SIG19033
SIG19034
MDATA0
MDATA1
MDATA2
MDATA3
MDATA4
MDATA5
MDATA6
MDATA7
MDATA8
MDATA9
MDATA10
MDATA11
MDATA12
MDATA13
MDATA14
MDATA15
+2.6V_DMC
+2.6V_DMQ
C1601
C1602
C1603
C1610
C1604
C1605
C1606
C1607
C1608
100nF
C1609
20071219 added C4911
MVREF_1
GND
U03AS MAIN [114] DDR-1 Memory (PE0630)

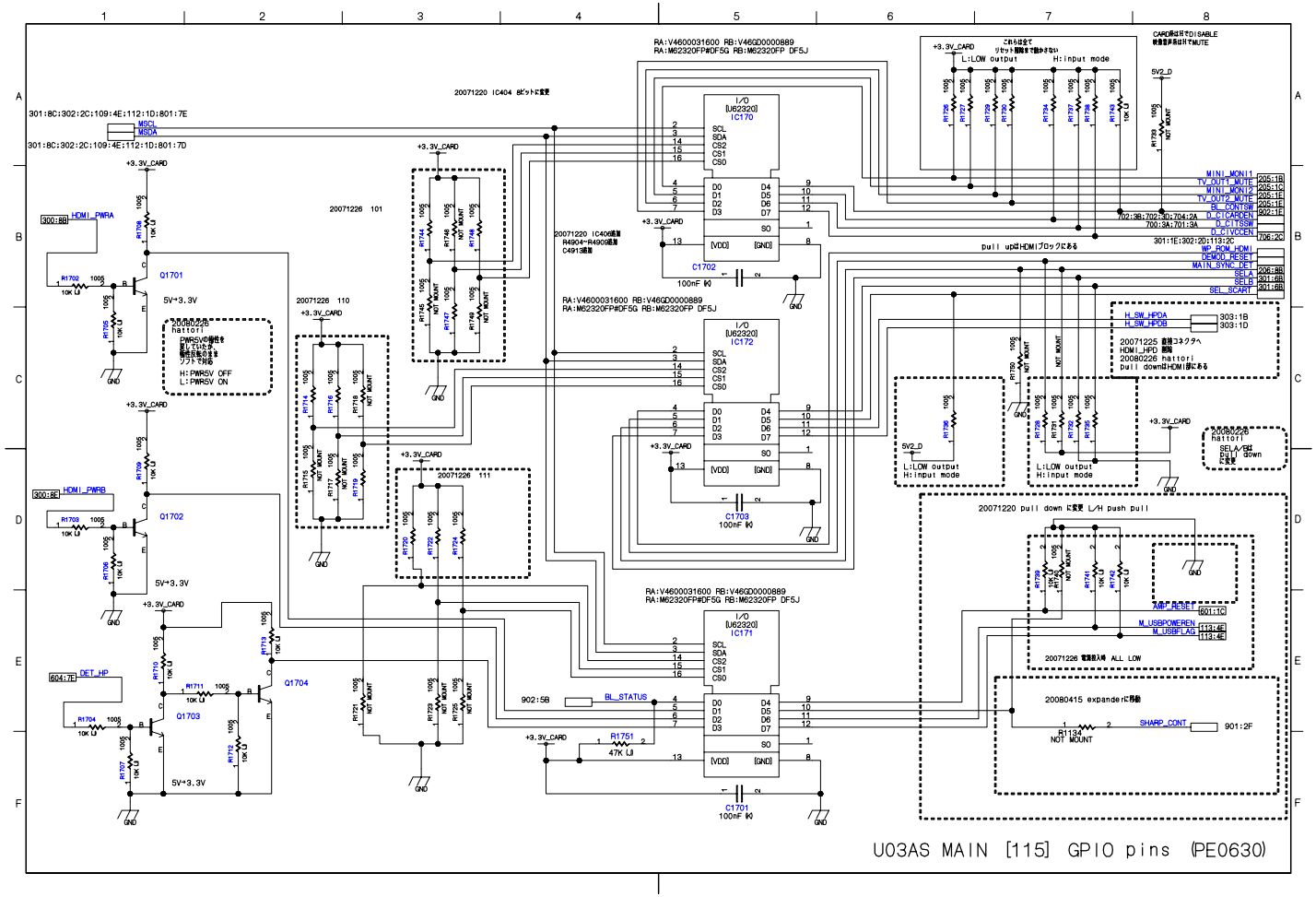
U03AS MAIN [115] GPIO pins (PE0630)
RA:V46000031600 RB:V46GD0000889
RA:M62320FP#DF5G RB:M62320FP DF5J
20071220 IC404 8ビットに変更
301:8C:302:2C:109:4E:112:1D:801:7E
MSCL
MSDA
301:8C:302:2C:109:4E:112:1D:801:7D
+3.3V_CARD
300:8B
HDMI_PWRA
Q1701
5V→3.3V
20071226 101
20071226 110
20071226 111
20071220 IC406廃止
R4904~R4906廃止
C4913廃止
I/O
[U62320]
IC170
IC172
IC171
SCL
SDA
CS2
CS1
CS0
D0
D1
D2
D3
D4
D5
D6
D7
SO
[VDD]
[GND]
C1702
C1703
C1701
100nF
GND
L:LOW output
H:input mode
5V2_D
MINI_MONI1
TV_OUT1_MUTE
MINI_MONI2
TV_OUT2_MUTE
BL_CONTSW
D_CTCARDEN
D_CTTSEW
D_CTVCCEN
WP_ROM_HDMI
DEMOD_RESET
MAIN_SYNC_DE
SELA
SELB
SEL_SCART
pull upはHDMIブロックにある
H_SW_HPDA
H_SW_HPDB
303:1B
303:1D
20071225 直接コネクタへ
HDMI_HPD 廃止
20080226 hattori
pull downはHDMI部にある
20080226
hattori
SELA/B pull down
廃止
20071220 pull down に変更 L/H push pull
AMP_RESET
601:1C
M_USBPOWEREN
M_USBFLAG
1113:4E
1113:4E
20071226 電源入時 ALL LOW
20080415 expanderに移動
SHARP_CONT
901:2F
R1134
NOT MOUNT
902:5B
BL_STATUS
R1751
47K
604:7E
DET_HP
Q1702
Q1703
Q1704
HDMI_PWRB
R1711
10K
R1712
R1713
R1714
R1715
R1716
R1717
R1718
R1719
R1720
R1721
R1722
R1723
R1724
R1725
R1726
R1727
R1728
R1729
R1730
R1731
R1732
R1733
R1734
R1735
R1736
R1737
R1738
R1739
R1740
R1741
R1742
R1743
R1744
R1745
R1746
R1747
R1748
R1749
R1750
R1752
R1753
R1754
R1755
R1756
R1757
R1758
R1759
R1760
R1761
R1762
R1763
R1764
R1765
R1766
R1767
R1768
R1769
R1770
R1771
R1772
R1773
R1774
R1775
R1776
R1777
R1778
R1779
NOT MOUNT
H:PWR5V OFF
L:PWR5V ON

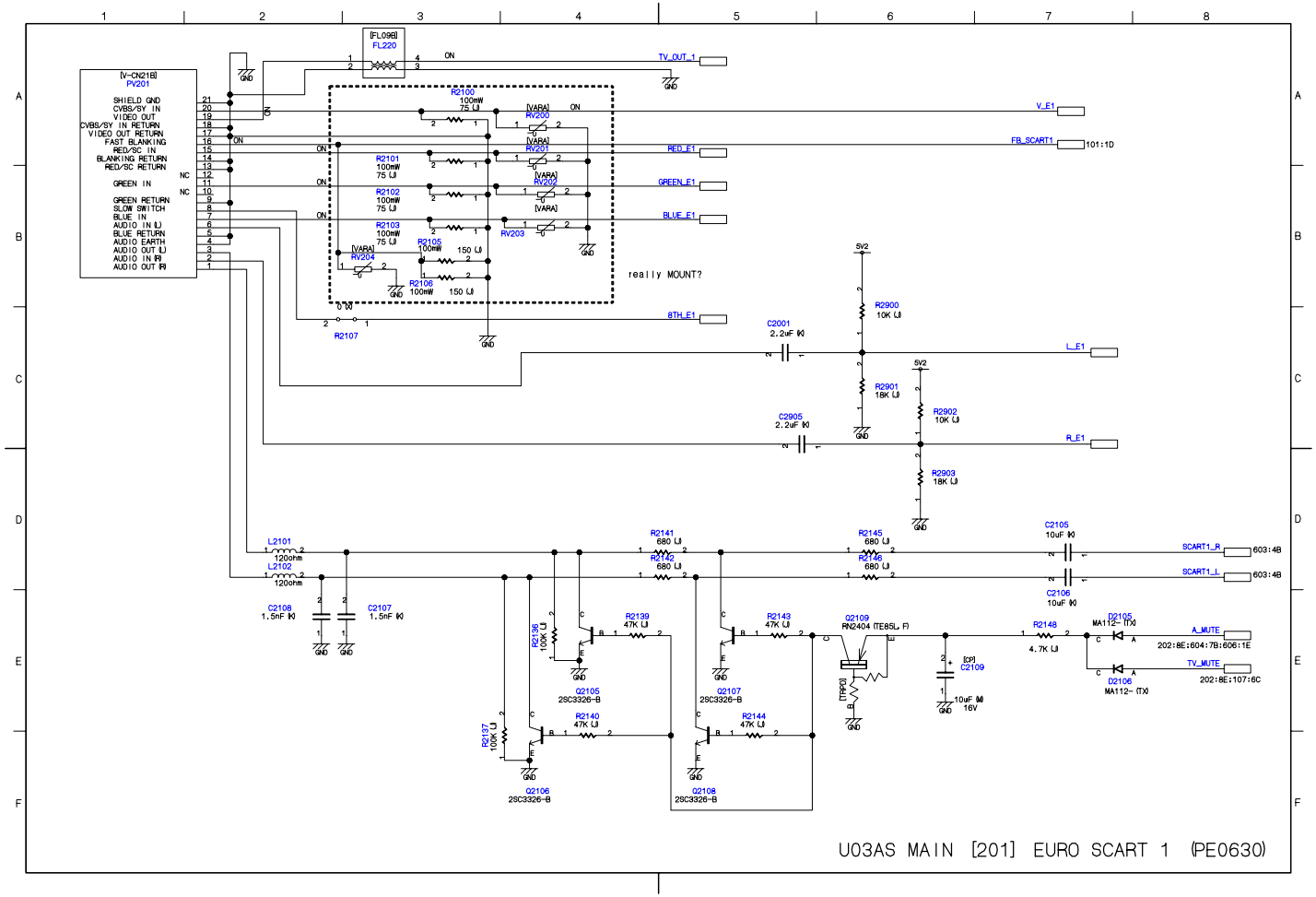
[V-CN21B]
PV201
SHIELD GND
CVBS/SY IN
VIDEO OUT
CVBS/SY IN RETURN
VIDEO OUT RETURN
FAST BLANKING
RED/SC IN
BLANKING RETURN
RED/SC RETURN
GREEN IN
GREEN RETURN
SLOW SWITCH
BLUE IN
AUDIO IN (L)
BLUE RETURN
AUDIO EARTH
AUDIO OUT (L)
AUDIO IN (R)
AUDIO OUT (R)
[FL09B]
FL220
TV_OUT_1
V_E1
FB_SCART1
101:1D
RED_E1
GREEN_E1
BLUE_E1
STH_E1
R2100 100mW 75 (J)
R2101 100mW 75 (J)
R2102 100mW 75 (J)
R2103 100mW 75 (J)
R2105 100mW 150 (J)
R2106 100mW 150 (J)
RV200
RV201
RV202
RV203
RV204
R2107
really MOUNT?
5V2
R2900 10K (J)
R2901 18K (J)
R2902 10K (J)
R2903 18K (J)
C2001 2.2uF (K)
C2905 2.2uF (K)
L_E1
R_E1
L2101 120ohm
L2102 120ohm
C2108 1.5nF (K)
C2107 1.5nF (K)
R2141 680 (J)
R2142 680 (J)
R2145 680 (J)
R2146 680 (J)
C2105 10uF (K)
C2106 10uF (K)
SCART1_R
SCART1_L
603:4B
R2136 100K (J)
R2137 100K (J)
R2139 47K (J)
R2140 47K (J)
R2143 47K (J)
R2144 47K (J)
Q2105 2SC3326-B
Q2106 2SC3326-B
Q2107 2SC3326-B
Q2108 2SC3326-B
Q2109 RN2404 (TE85L, F)
R2148 4.7K (J)
C2109 10uF (M) 16V
D2105 MA112- (TX)
D2106 MA112- (TX)
A_MUTE
202:8E:604:7B:606:1E
TV_MUTE
202:8E:107:6C
U03AS MAIN [201] EURO SCART 1 (PE0630)

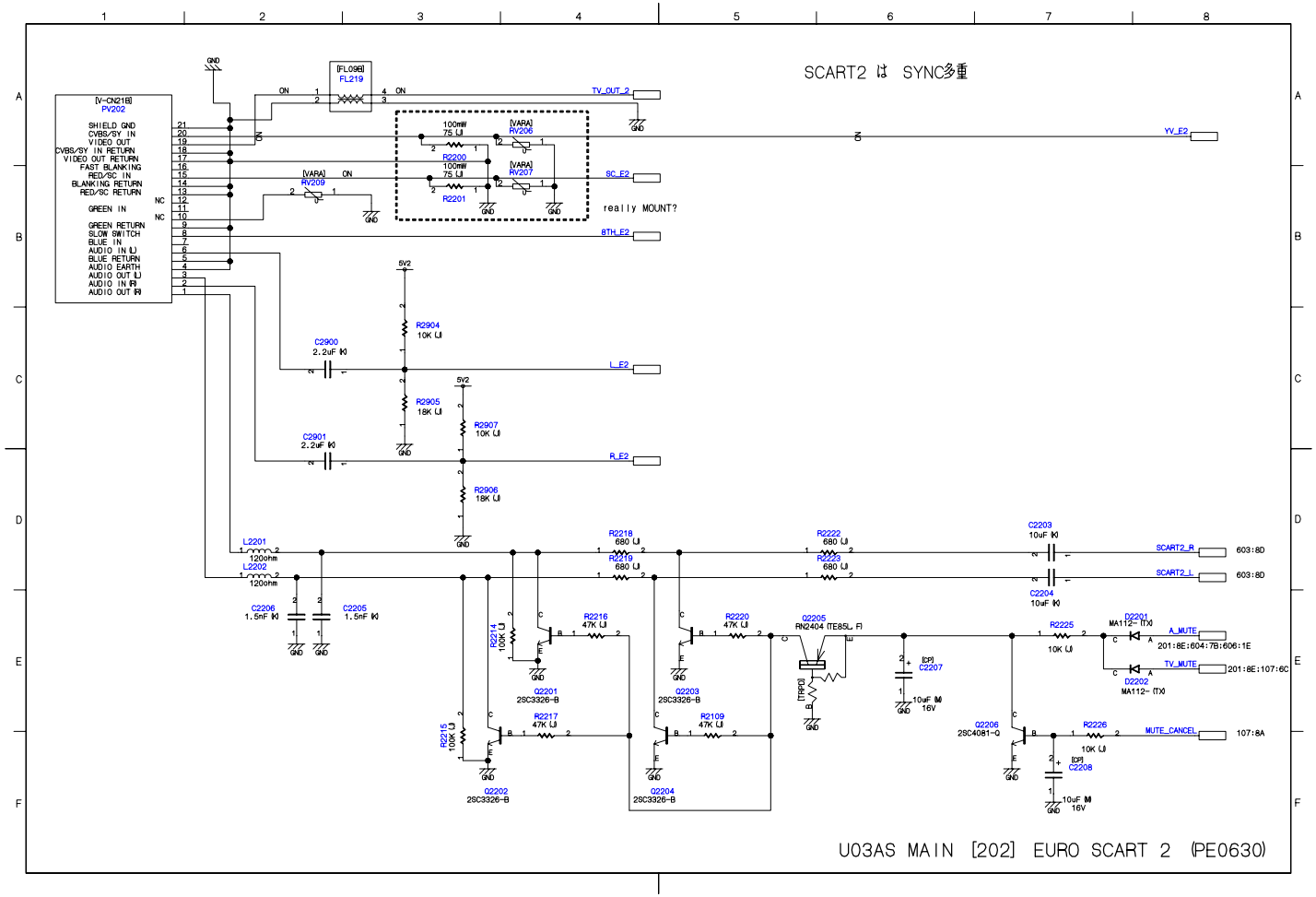
SCART2 は SYNC多重
[V-CN21B]
PV202
SHIELD GND
CVBS/SY IN
VIDEO OUT
CVBS/SY IN RETURN
VIDEO OUT RETURN
FAST BLANKING
RED/SC IN
BLANKING RETURN
RED/SC RETURN
GREEN IN
GREEN RETURN
SLOW SWITCH
BLUE IN
AUDIO IN (L)
BLUE RETURN
AUDIO EARTH
AUDIO OUT (L)
AUDIO IN (R)
AUDIO OUT (R)
[FL09B]
FL219
TV_OUT_2
YV_E2
SC_E2
BTH_E2
L_E2
R_E2
SCART2_R
SCART2_L
A_MUTE
TV_MUTE
MUTE_CANCEL
603:8D
201:8E:604:7B:606:1E
201:8E:107:6C
107:8A
[VARA]
RV206
RV207
RV209
100mW
75 (J)
R2200
R2201
R2904
10K (J)
R2905
18K (J)
R2907
10K (J)
R2906
18K (J)
C2900
2.2uF (K)
C2901
2.2uF (K)
5V2
L2201
L2202
120ohm
C2206
1.5nF (K)
C2205
1.5nF (K)
R2218
680 (J)
R2219
680 (J)
R2222
680 (J)
R2223
680 (J)
C2203
10uF (K)
C2204
10uF (K)
R2214
100K (J)
R2215
100K (J)
R2216
47K (J)
R2217
47K (J)
R2220
47K (J)
R2109
47K (J)
Q2201
2SC3326-B
Q2202
2SC3326-B
Q2203
2SC3326-B
Q2204
2SC3326-B
Q2205
RN2404 (TE85L, F)
[TRPD]
[CP]
C2207
10uF (M)
16V
R2225
10K (J)
D2201
MA112- (TX)
D2202
MA112- (TX)
Q2206
2SC4081-Q
R2226
10K (J)
C2208
really MOUNT?
U03AS MAIN [202] EURO SCART 2 (PE0630)

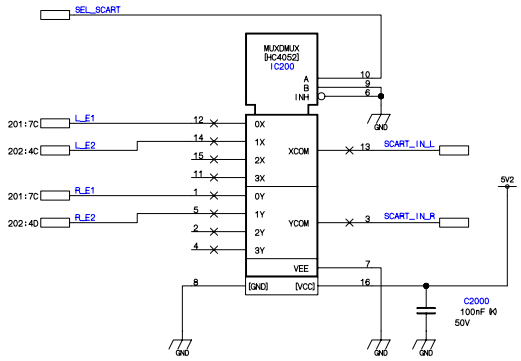

U03AS MAIN [203] SCART selector (PE0630)

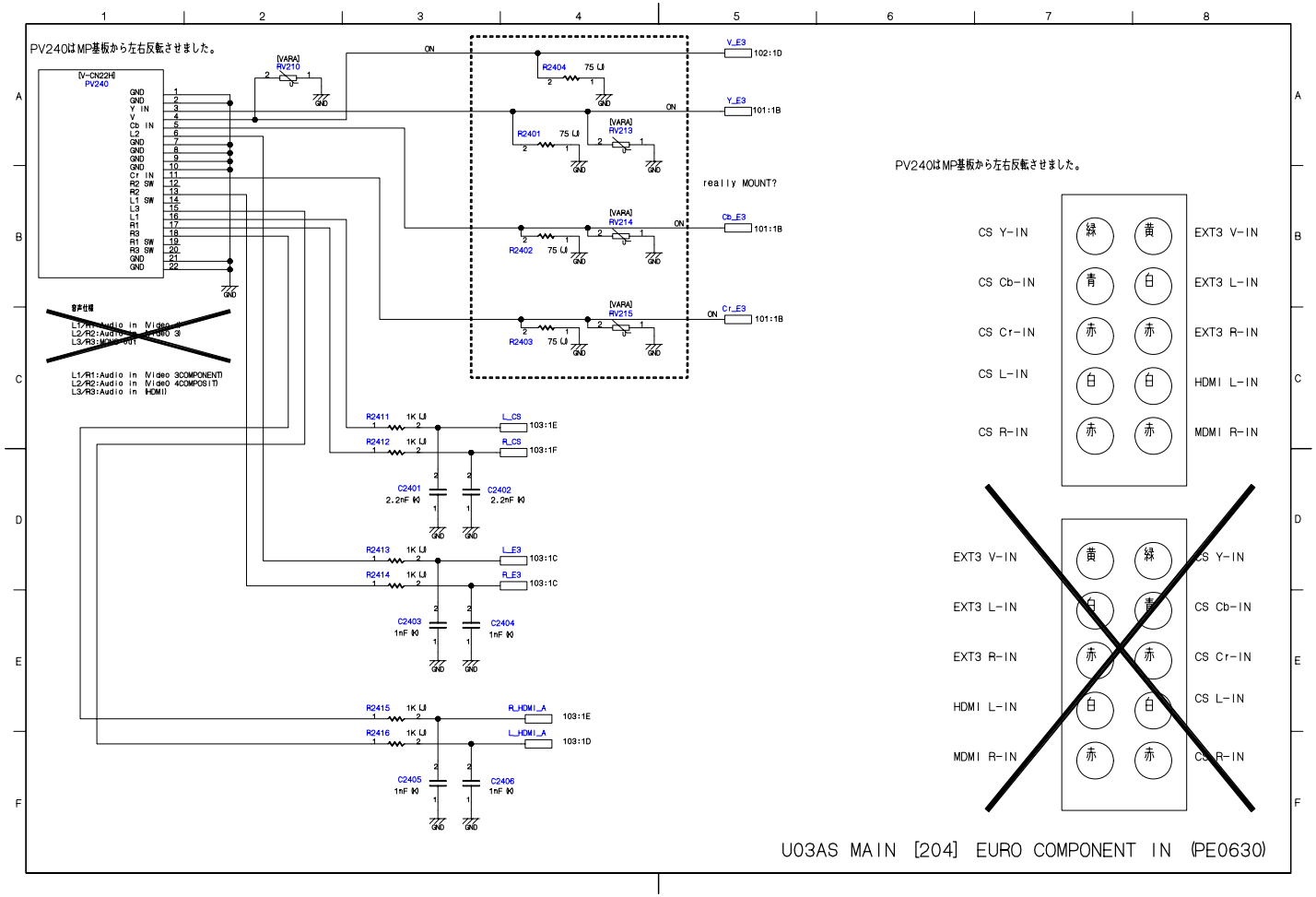
PV240はMP基板から左右反転させました。
[V-CN22H]
PV240
GND
GND
Y IN
V
Cb IN
L2
GND
GND
GND
GND
Cr IN
R2 SW
R2
L1 SW
L3
L1
R1
R3
R1 SW
R3 SW
GND
GND
[VARA]
RV210
ON
V_E3
102:1D
R2404
75 Ω
Y_E3
101:1B
R2401
75 Ω
[VARA]
RV213
really MOUNT?
[VARA]
RV214
Cb_E3
101:1B
R2402
75 Ω
[VARA]
RV215
Cr_E3
101:1B
R2403
75 Ω
音声仕様
L1/R1:Audio in (Video 3COMPONENT)
L2/R2:Audio in (Video 4COMPOSIT)
L3/R3:Audio in (HDMI)
R2411
1K Ω
L_CS
103:1E
R2412
1K Ω
R_CS
103:1F
C2401
2.2nF
C2402
2.2nF
R2413
1K Ω
L_E3
103:1C
R2414
1K Ω
R_E3
103:1C
C2403
1nF
C2404
1nF
R2415
1K Ω
R_HDMI_A
103:1E
R2416
1K Ω
L_HDMI_A
103:1D
C2405
1nF
C2406
1nF
GND
PV240はMP基板から左右反転させました。
CS Y-IN
CS Cb-IN
CS Cr-IN
CS L-IN
CS R-IN
緑
黄
青
白
赤
赤
白
赤
EXT3 V-IN
EXT3 L-IN
EXT3 R-IN
HDMI L-IN
MDMI R-IN
EXT3 V-IN
EXT3 L-IN
EXT3 R-IN
HDMI L-IN
MDMI R-IN
黄
緑
白
青
赤
赤
白
白
赤
赤
CS Y-IN
CS Cb-IN
CS Cr-IN
CS L-IN
CS R-IN
U03AS MAIN [204] EURO COMPONENT IN (PE0630)

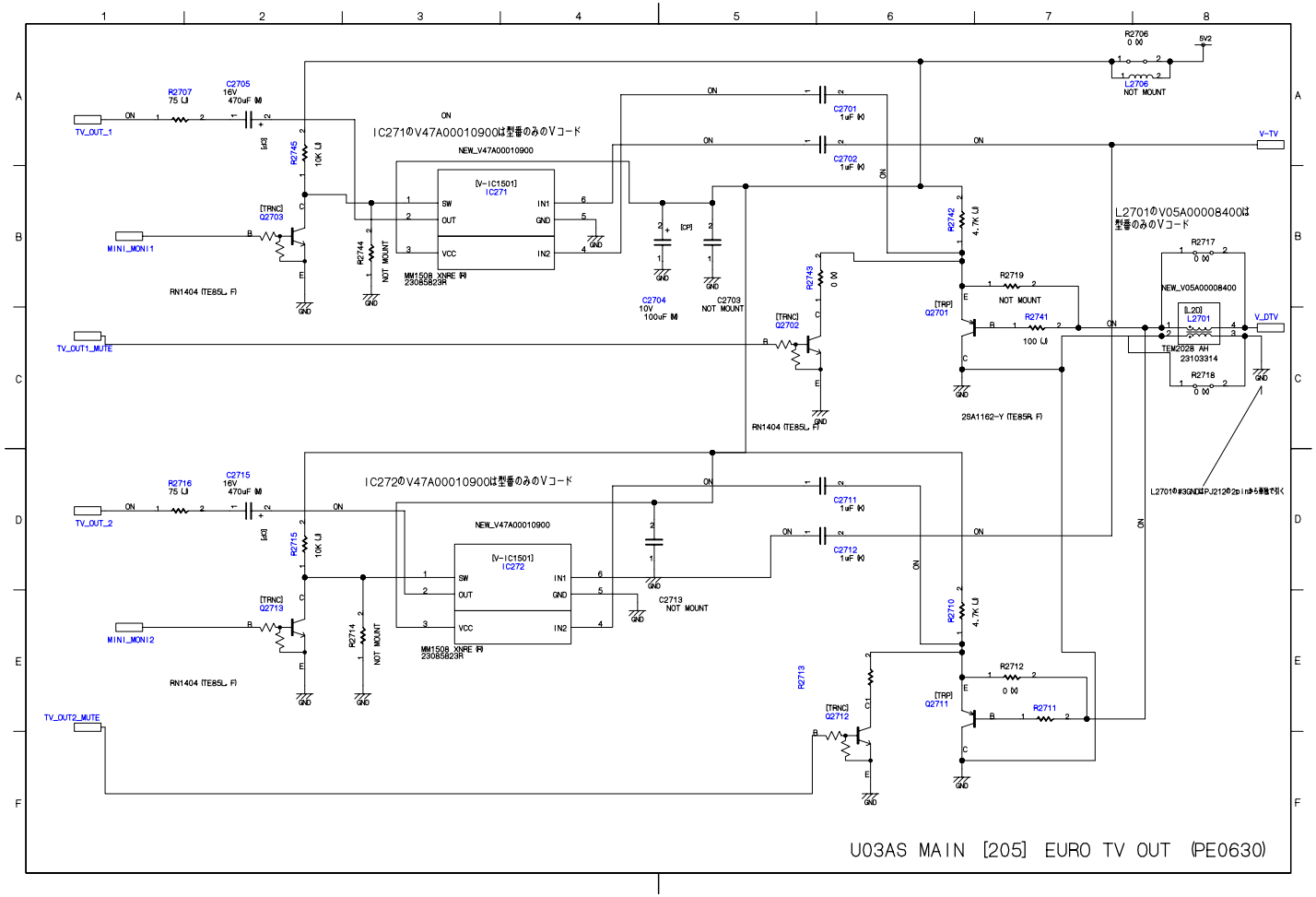

U03AS MAIN [205] EURO TV OUT (PE0630)

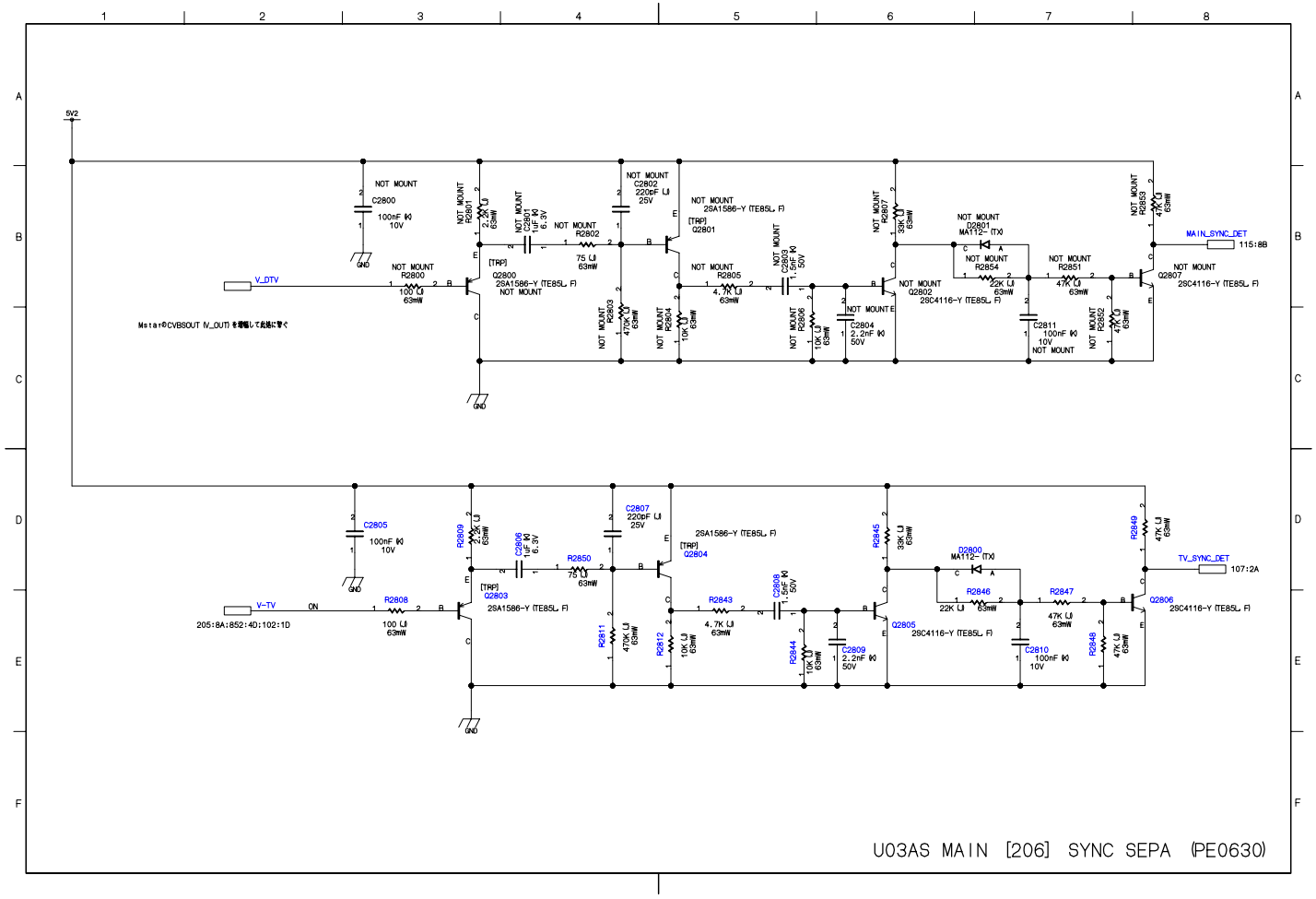

U03AS MAIN [206] SYNC SEPA (PE0630)

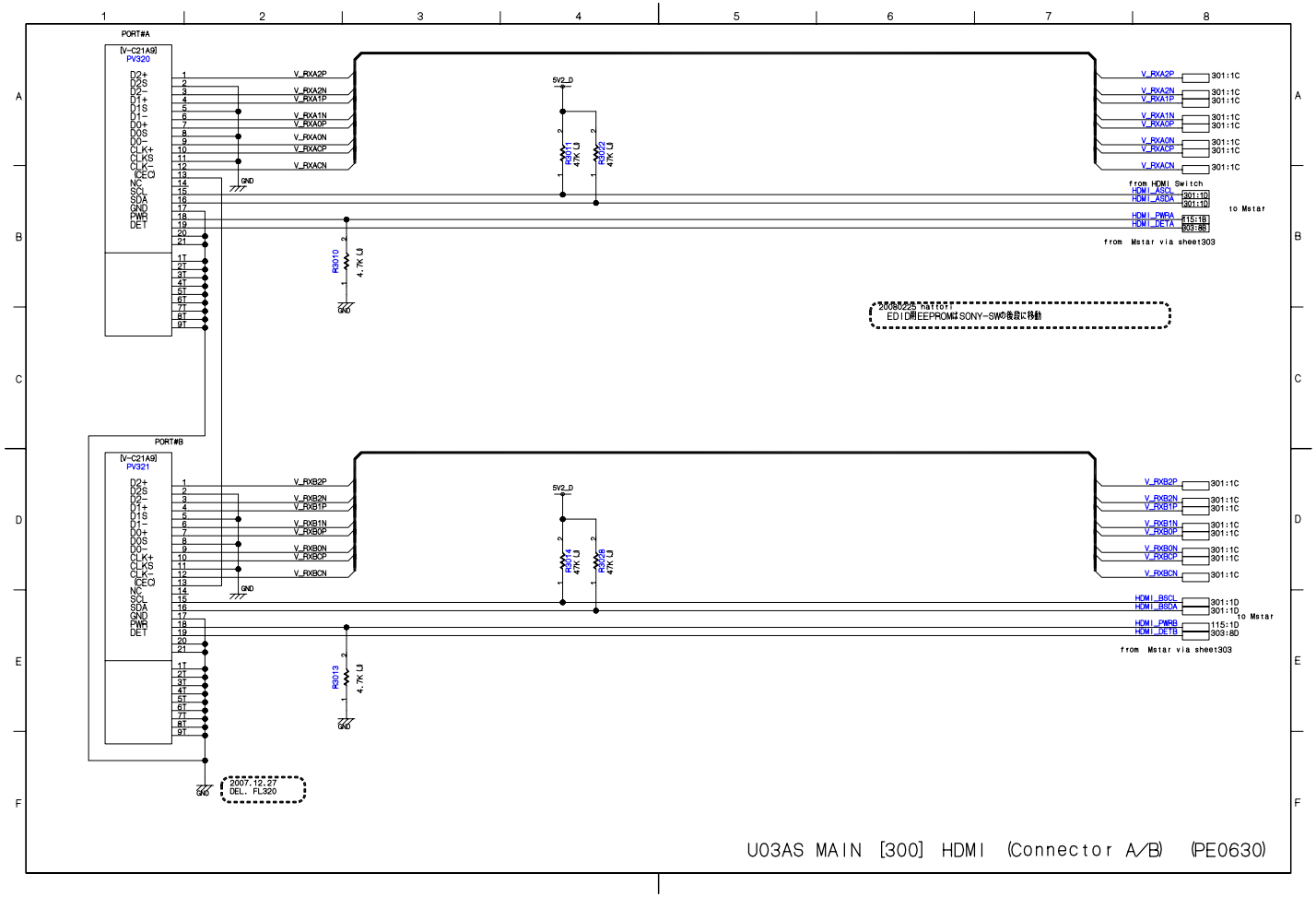

U03AS MAIN [300] HDMI (Connector A/B) (PE0630)

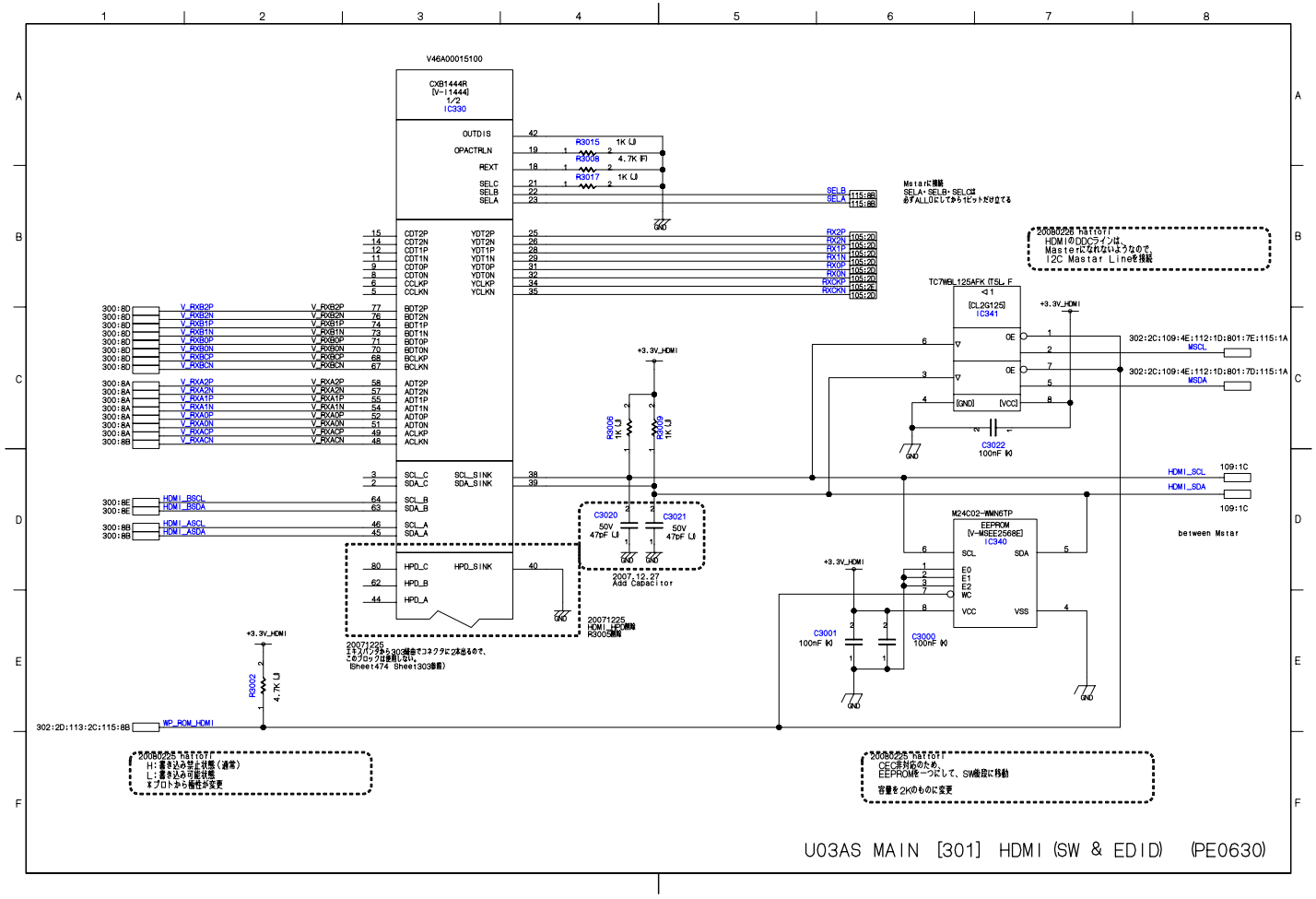
V46A00015100
CXB1444R
[V-11444]
1/2
IC330
OUTDIS
OPACTRLN
REXT
SELC
SELB
SELA
R3015 1K
R3008 4.7K
R3017 1K
SELB 115:8B
SELA 115:8B
Mstarに接続
SELA・SELB・SELCは
あずALLOにしてからビットだけ立てる
CDT2P CDT2N CDT1P CDT1N CDT0P CDT0N CCLKP CCLKN
YDT2P YDT2N YDT1P YDT1N YDT0P YDT0N YCLKP YCLKN
RX2P RX2N RX1P RX1N RX0P RX0N RXCKP RXCKN 105:2D
BDT2P BDT2N BDT1P BDT1N BDTOP BDTON BCLKP BCLKN
ADT2P ADT2N ADT1P ADT1N ADTOP ADTON ACLKP ACLKN
V_RXB2P V_RXB2N V_RXB1P V_RXB1N V_RXB0P V_RXB0N V_RXBCP V_RXBCN 300:8D
V_RXA2P V_RXA2N V_RXA1P V_RXA1N V_RXA0P V_RXA0N V_RXACP V_RXACN 300:8A
SCL_C SDA_C SCL_SINK SDA_SINK
HDMI_BSCL HDMI_BSDA 300:8E
HDMI_ASCL HDMI_ASDA 300:8B
HPD_C HPD_B HPD_A HPD_SINK
+3.3V_HDMI
R3006 1K
R3009 1K
C3020 50V 47pF
C3021 50V 47pF
2007.12.27
Add Capacitor
20071225
HDMI_HPD削除
R3002削除
20071225
ミラパンタ&Sheet303組合せコネクタに2本出るので、
C87カップは使用しない。
(Sheet474 Sheet303参照)
R3002 4.7K
WP_ROM_HDMI 302:2D:113:2C:115:8B
20080225 hattori
HDMIのDDCラインは、
Masterになれないようなので、
I2C Mastar Lineを接続
TC7WBL125AFK (T5L, F
IC341
[CL2G125]
OE
[GND] [VCC]
C3022 100nF
302:2C:109:4E:112:1D:801:7E:115:1A MSCL
302:2C:109:4E:112:1D:801:7D:115:1A MSDA
HDMI_SCL HDMI_SDA 109:1C
between Mstar
M24C02-WMN6TP
EEPROM
[V-M3EE2568E]
IC340
SCL SDA
E0 E1 E2 WC
VCC VSS
C3001 100nF
C3000 100nF
20080225 hattori
H:書き込み禁止状態(通常)
L:書き込み可能状態
※プロトから極性が変更
20080225 hattori
CE3対応のため、
EEPROMを一つにして、SW後段に移動
容量を2Kのものに変更
U03AS MAIN [301] HDMI (SW & EDID) (PE0630)

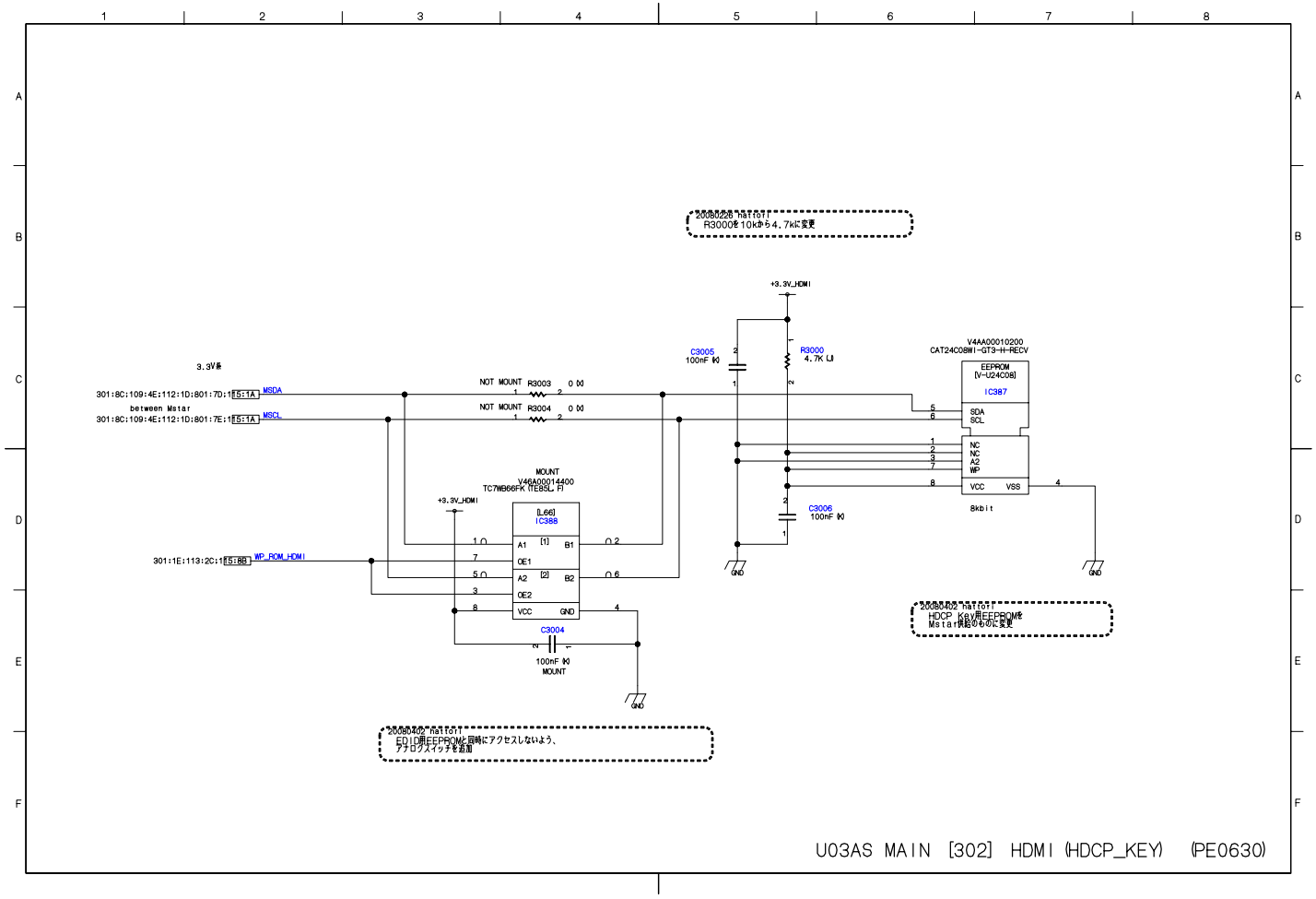

U03AS MAIN [302] HDMI (HDCP_KEY) (PE0630)

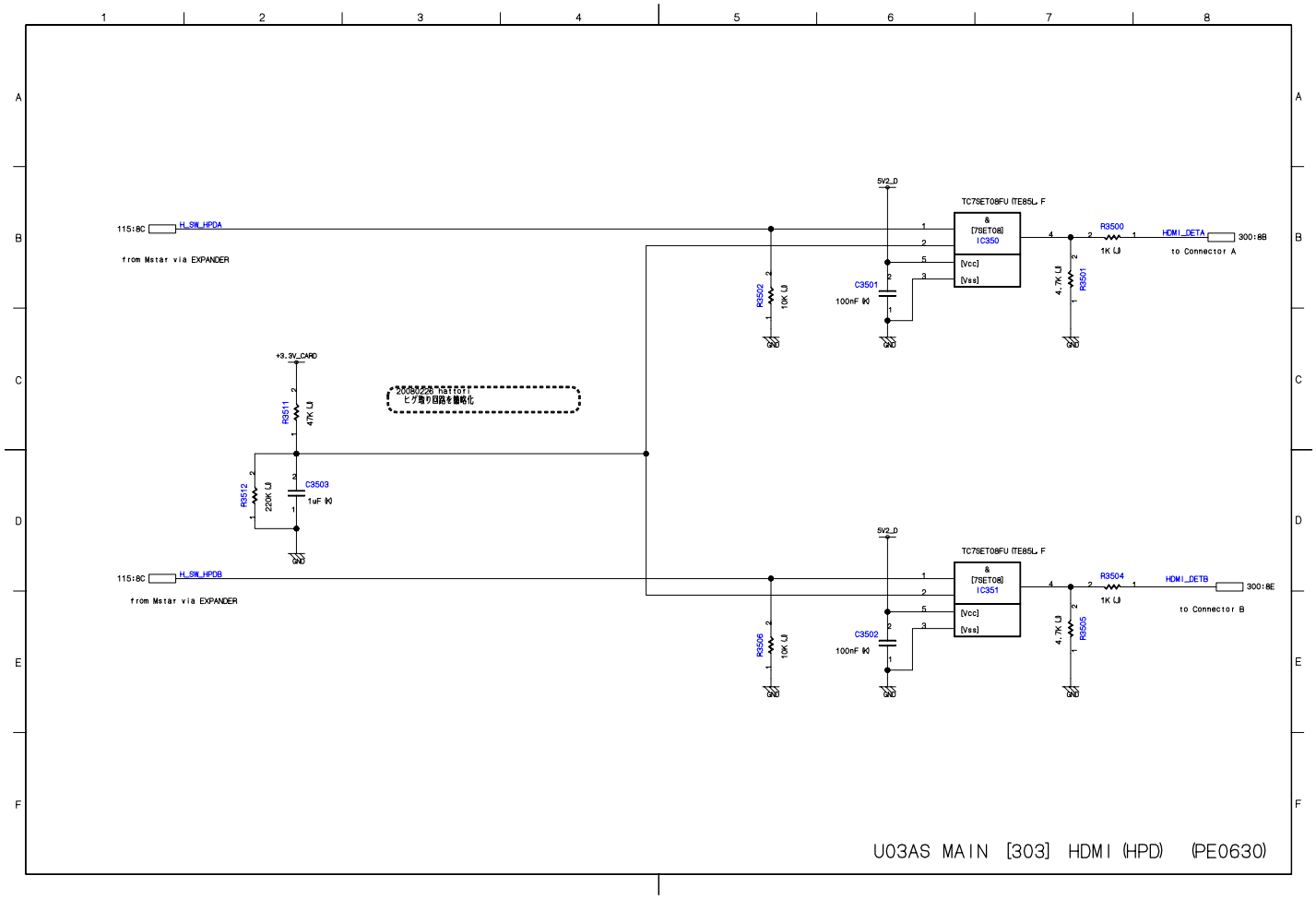

U03AS MAIN [303] HDMI (HPD) (PE0630)

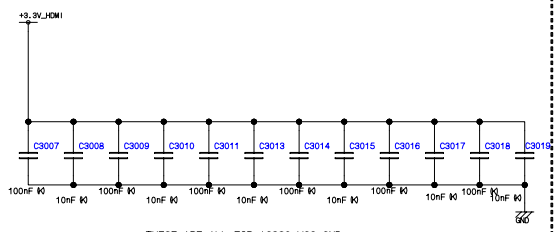

THESE ARE ALL FOR IC330 VCC-GND

20071219 DELETED

+3.3V_HDMI_REG

L3000, C3020

20071219 DELETED

+9V_HDMI
FL300, C3012

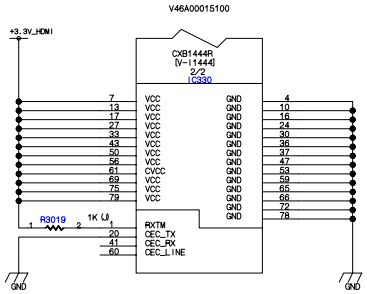

U03AS MAIN [304] HDMI (SW_POWER) (PE0630)

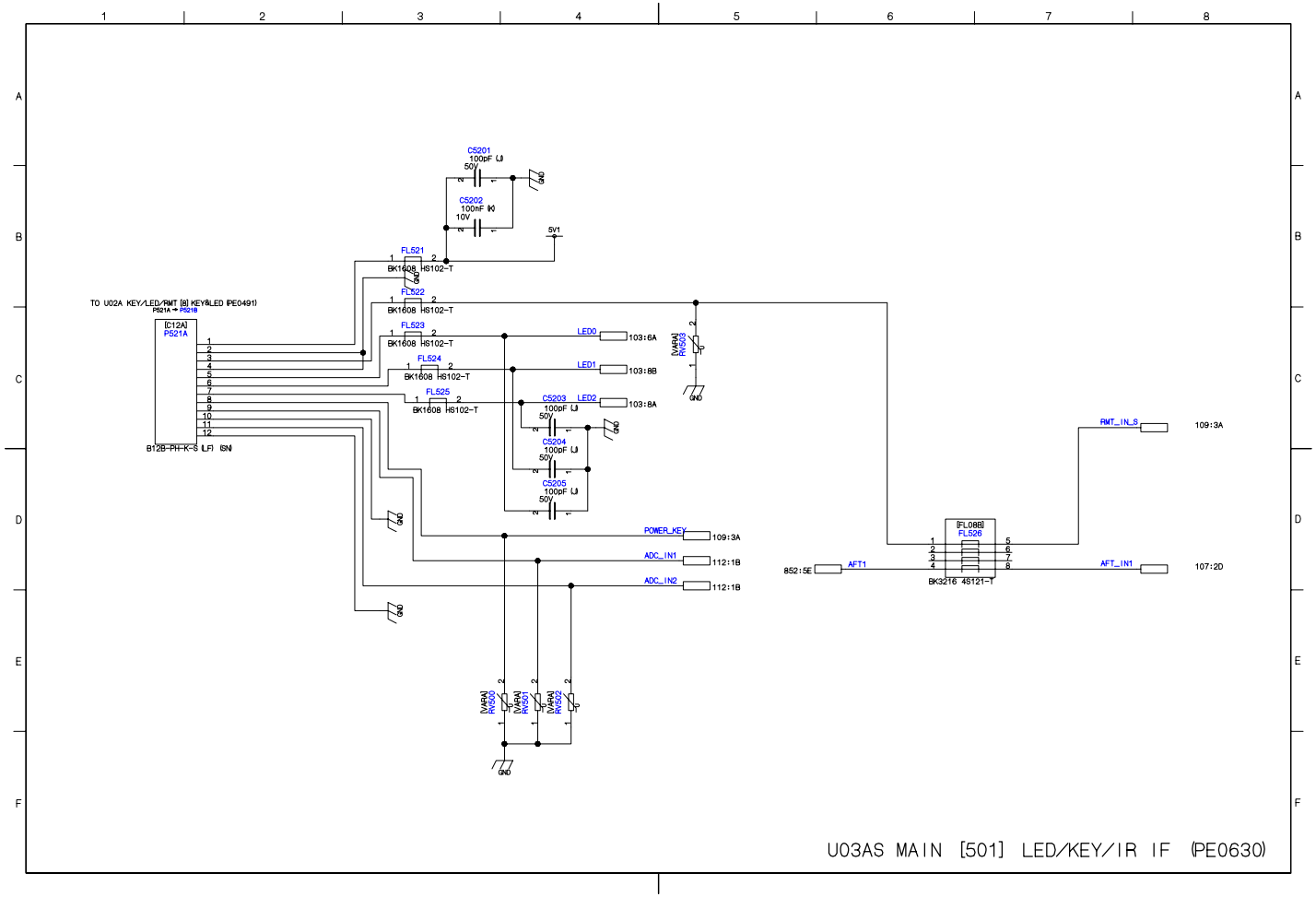

U03AS MAIN [501] LED/KEY/IR IF (PE0630)

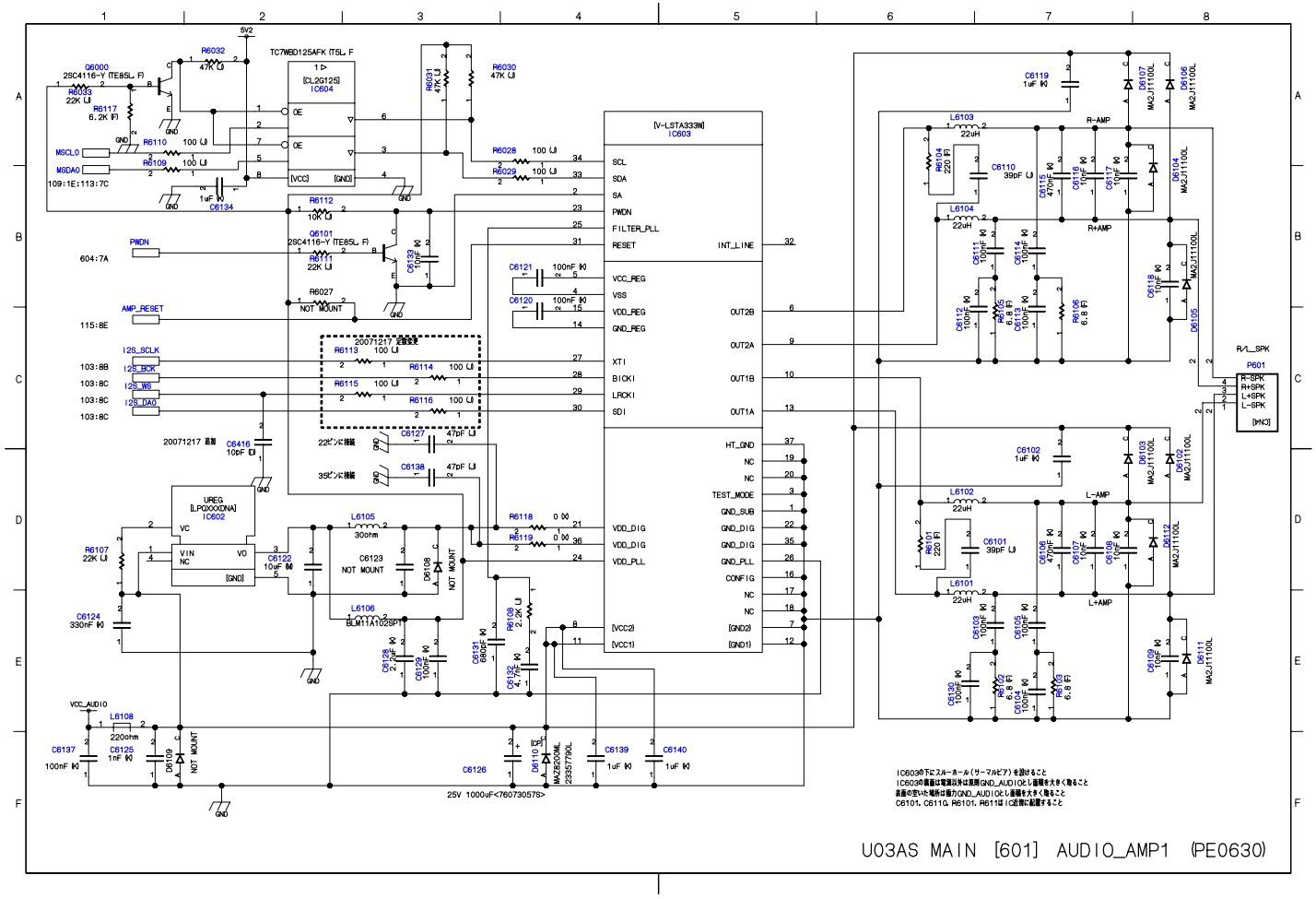
U03AS MAIN [601] AUDIO_AMP1 (PE0630)
IC603の下にスルーホール（サーマルビア）を設けること
IC603の裏面は電源以外は基準(GND_AUDIO)とし面積を大きく取ること
表面の空いた場所は極力GND_AUDIOとし面積を大きく取ること
C6101, C6110, R6101, R6110はICの近傍に配置すること
[V-LSTA333W]
IC603
TC7WBD125AFK (TSL, F)
IC604
UREG
[LP0X0XDNA]
IC602
P601
R-SPK
R+SPK
L+SPK
L-SPK
[PNC]
R-AMP
R+AMP
L-AMP
L+AMP
MSCL0
MSDA0
PWDN
AMP_RESET
I2S_SCLK
I2S_BCK
I2S_WS
I2S_DAO
VCC_AUDIO
25V 1000uF<760730578>
20071217 追加
22ピンに接続
35ピンに接続
NOT MOUNT

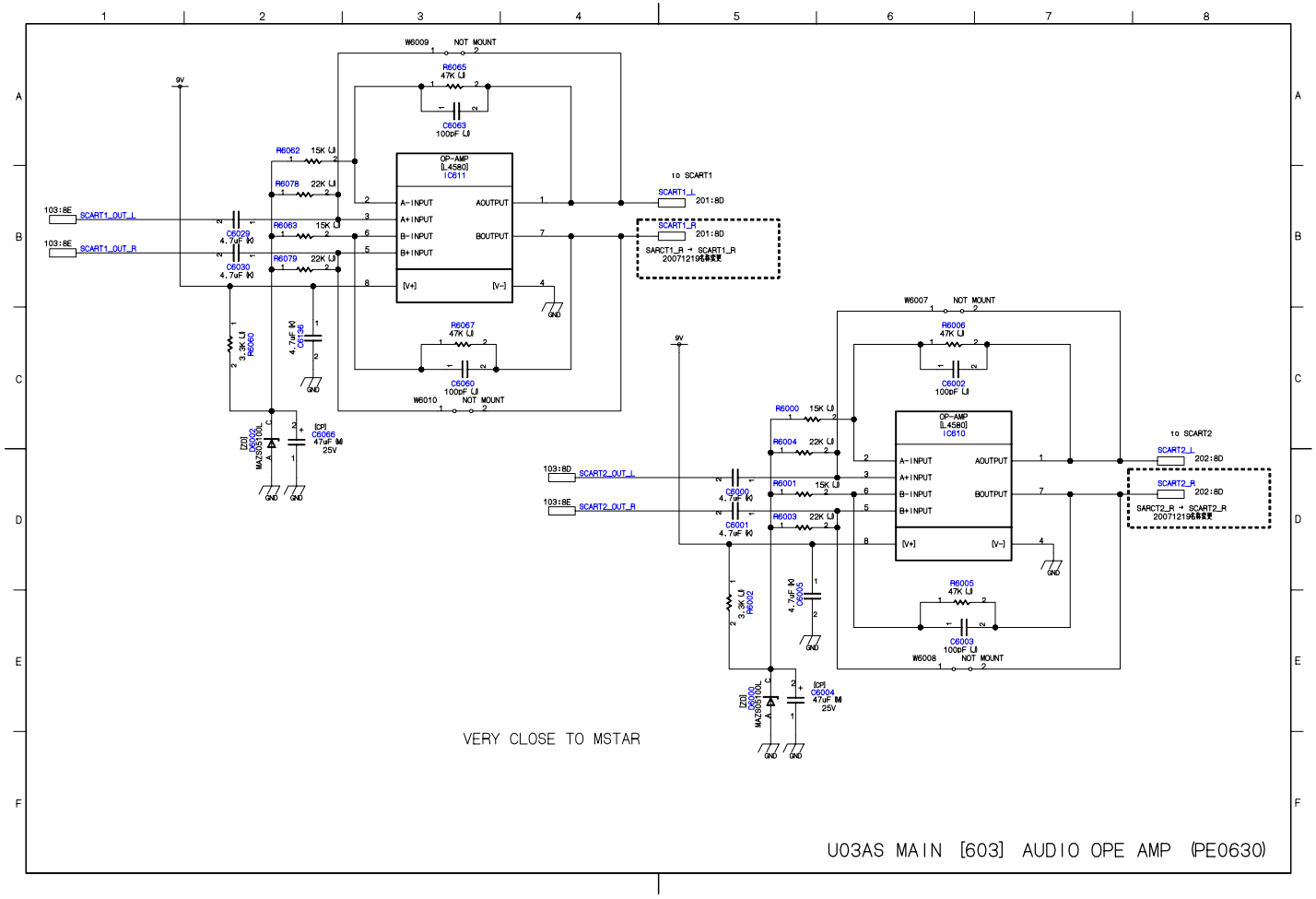

U03AS MAIN [603] AUDIO OPE AMP (PE0630)

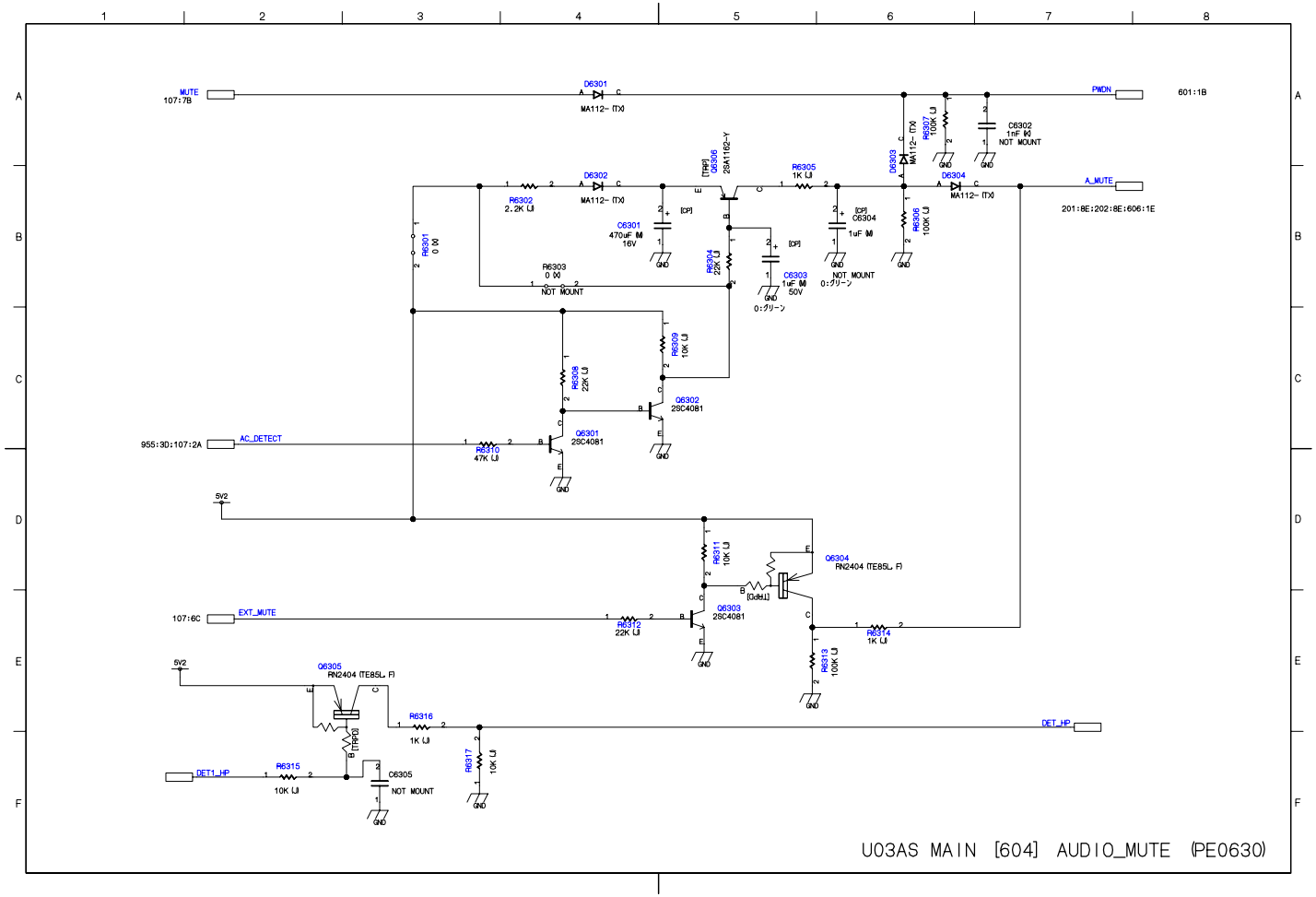
MUTE
107:7B
D6301
MA112- (TX)
PWDN
601:1B
C6302
1nF (M)
NOT MOUNT
R6307
100K (J)
D6303
MA112- (TX)
D6304
MA112- (TX)
A_MUTE
201:8E:202:8E:606:1E
D6302
MA112- (TX)
R6302
2.2K (J)
Q6306
2SA1162-Y
R6305
1K (J)
C6301
470uF (M)
16V
C6304
1uF (M)
NOT MOUNT
0:グリーン
R6306
100K (J)
R6304
22K (J)
C6303
1uF (M)
50V
0:グリーン
R6301
0 (X)
R6303
0 (X)
NOT MOUNT
R6309
10K (J)
R6308
22K (J)
Q6302
2SC4081
Q6301
2SC4081
955:3D:107:2A
AC_DETECT
R6310
47K (J)
5V2
R6311
10K (J)
Q6304
RN2404 (TE85L, F)
107:6C
EXT_MUTE
R6312
22K (J)
Q6303
2SC4081
R6314
1K (J)
R6313
100K (J)
5V2
Q6305
RN2404 (TE85L, F)
R6316
1K (J)
DET_HP
DET1_HP
R6315
10K (J)
C6305
NOT MOUNT
R6317
10K (J)
U03AS MAIN [604] AUDIO_MUTE (PE0630)

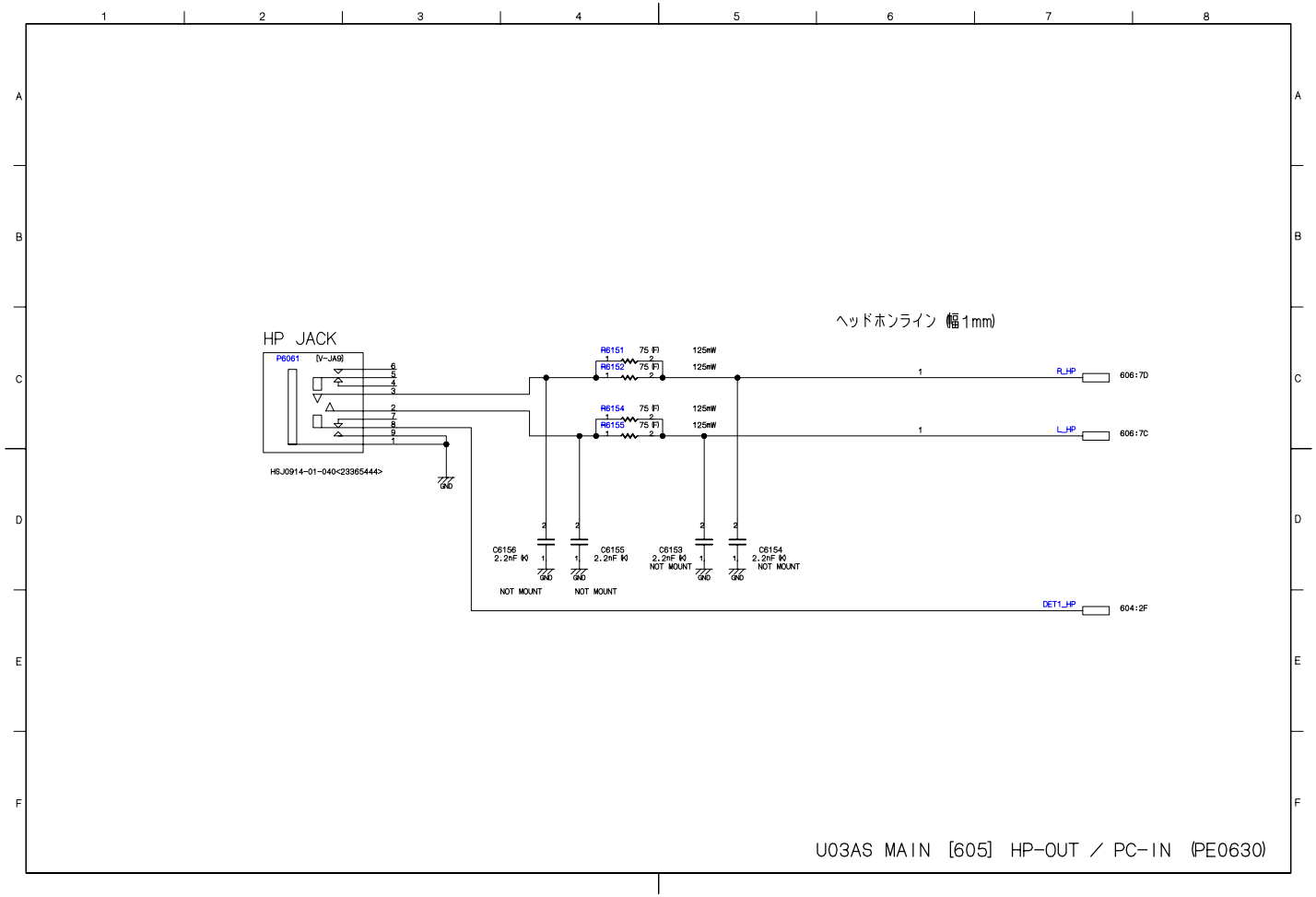

U03AS MAIN [605] HP-OUT / PC-IN (PE0630)

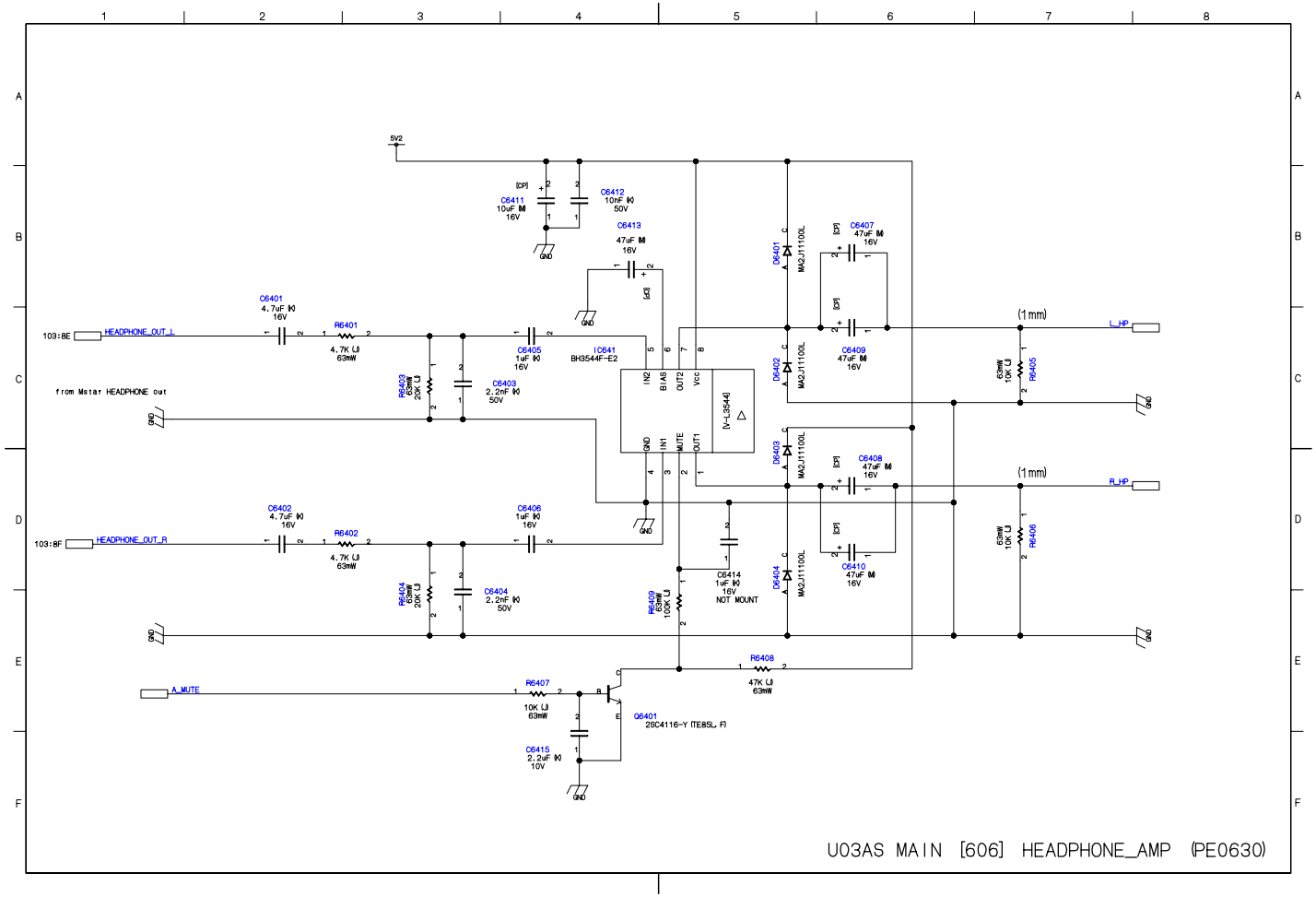

U03AS MAIN [606] HEADPHONE_AMP (PE0630)

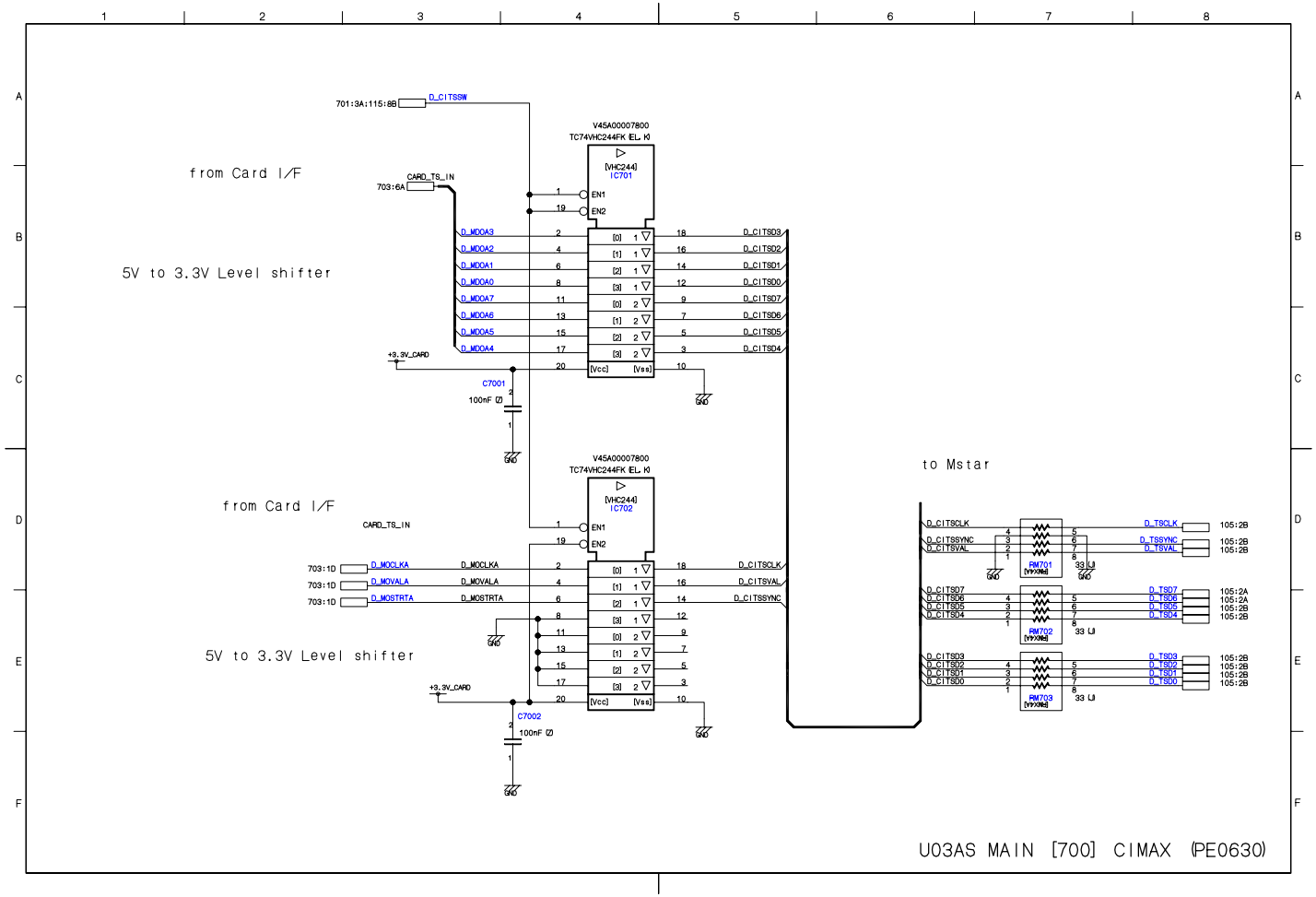
from Card I/F
5V to 3.3V Level shifter
701:3A:115:8B
D_CITSSW
CARD_TS_IN
703:6A
V45A00007800
TC74VHC244FK (EL, K)
[VHC244]
IC701
EN1
EN2
D_MDOA3
D_MDOA2
D_MDOA1
D_MDOA0
D_MDOA7
D_MDOA6
D_MDOA5
D_MDOA4
+3.3V_CARD
C7001
100nF (Z)
D_CITSD3
D_CITSD2
D_CITSD1
D_CITSD0
D_CITSD7
D_CITSD6
D_CITSD5
D_CITSD4
[Vcc]
[Vss]
GND
from Card I/F
5V to 3.3V Level shifter
CARD_TS_IN
IC702
703:1D
D_MOCLKA
D_MOVALA
D_MOSTRTA
C7002
D_CITSCLK
D_CITSVAL
D_CITSSYNC
to Mstar
RM701
RM702
RM703
33 (J)
D_TSCLK
D_TSSYNC
D_TSVAL
D_TSD7
D_TSD6
D_TSD5
D_TSD4
D_TSD3
D_TSD2
D_TSD1
D_TSD0
105:2B
105:2A
U03AS MAIN [700] CIMAX (PE0630)

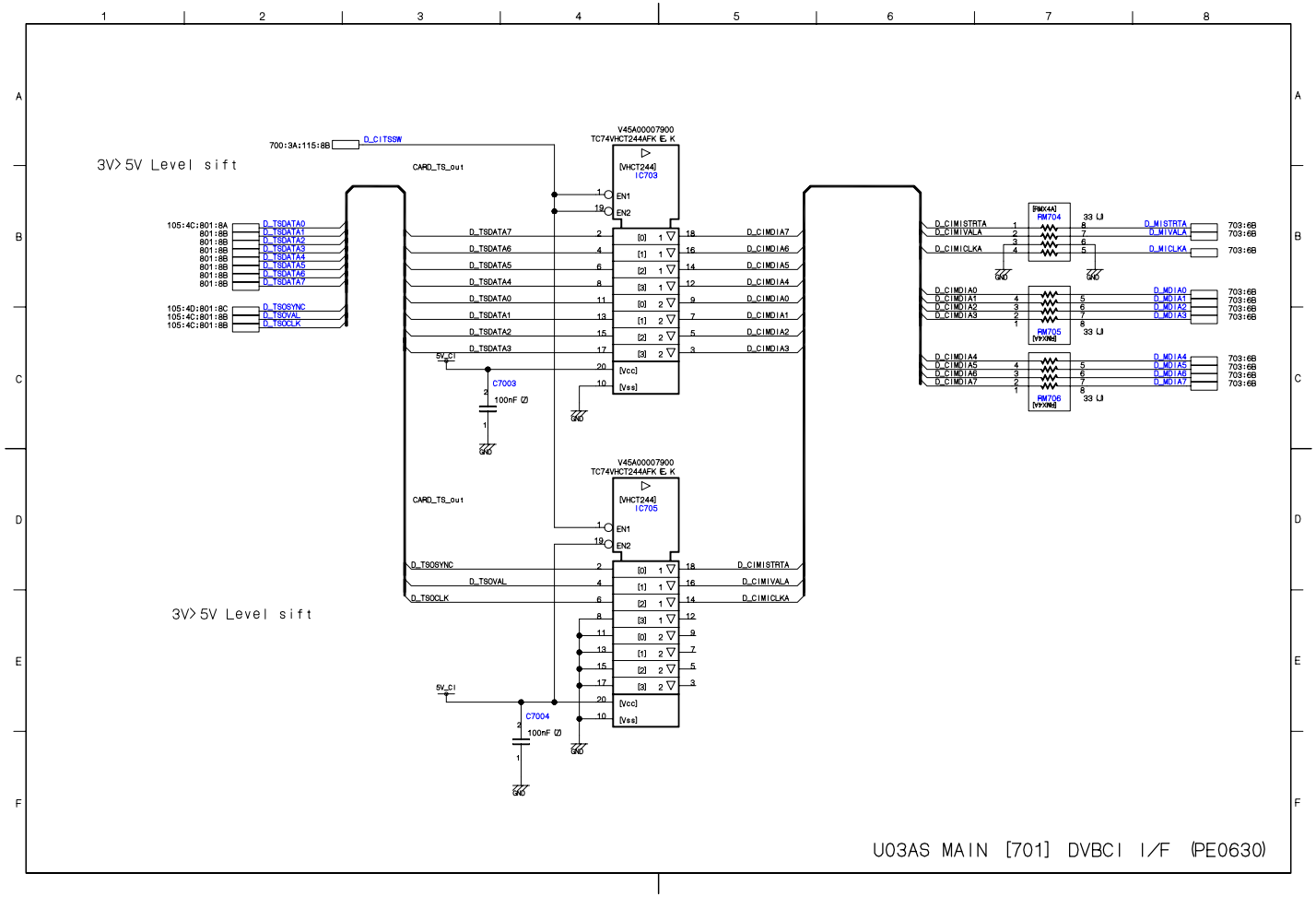

U03AS MAIN [701] DVBCI I/F (PE0630)

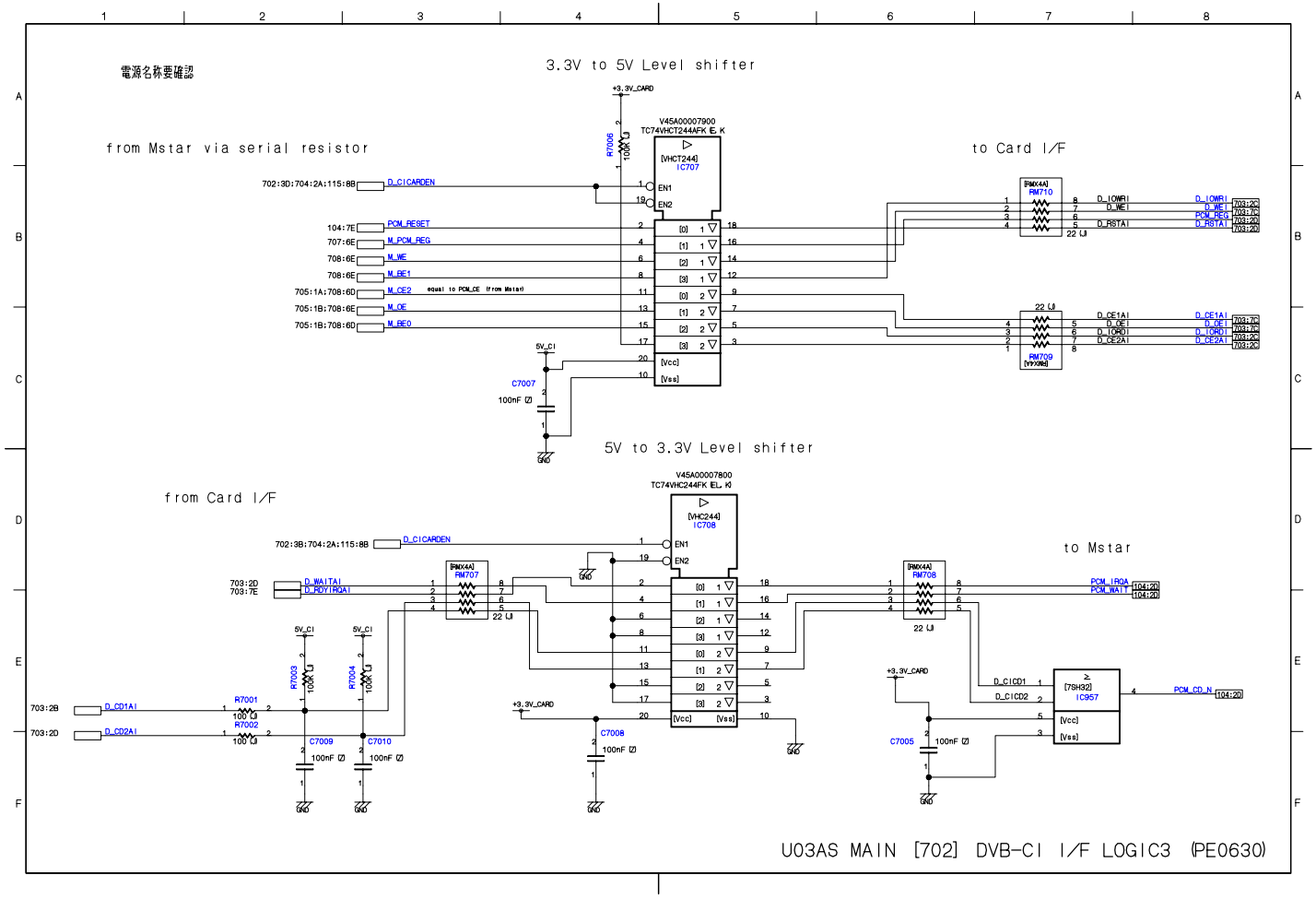

U03AS MAIN [702] DVB-CI I/F LOGIC3 (PE0630)

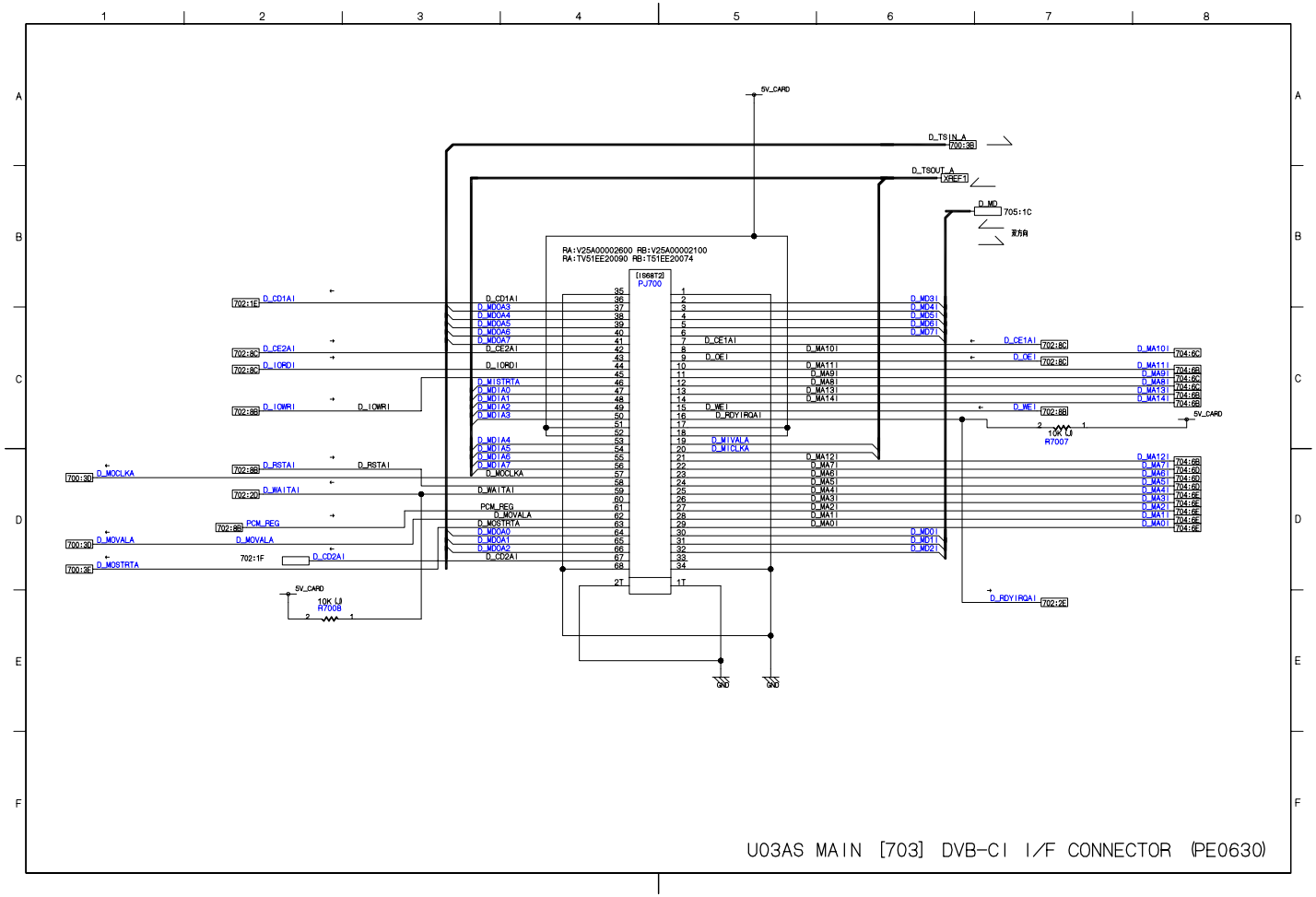

U03AS MAIN [703] DVB-CI I/F CONNECTOR (PE0630)

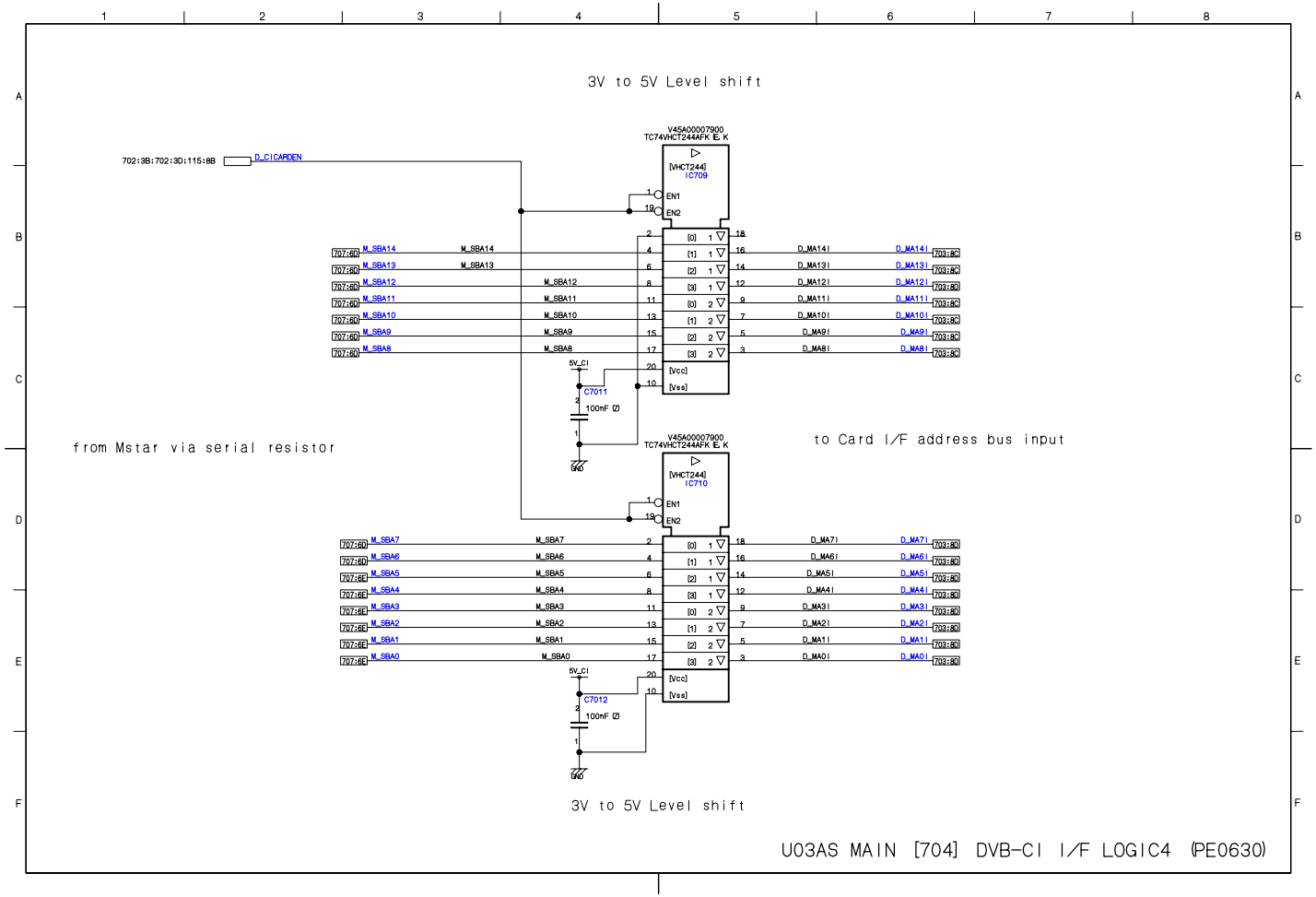
3V to 5V Level shift
V45A00007900
TC74VHCT244AFK E, K
[VHCT244]
IC709
EN1
EN2
[0] 1
[1] 1
[2] 1
[3] 1
[0] 2
[1] 2
[2] 2
[3] 2
[Vcc]
[Vss]
702:3B:702:3D:115:8B
D_CICARDEN
707:6D M_SBA14 M_SBA14
707:6D M_SBA13 M_SBA13
707:6D M_SBA12 M_SBA12
707:6D M_SBA11 M_SBA11
707:6D M_SBA10 M_SBA10
707:6D M_SBA9 M_SBA9
707:6D M_SBA8 M_SBA8
D_MA14I D_MA14I 703:8C
D_MA13I D_MA13I 703:8C
D_MA12I D_MA12I 703:8C
D_MA11I D_MA11I 703:8C
D_MA10I D_MA10I 703:8C
D_MA9I D_MA9I 703:8C
D_MA8I D_MA8I 703:8C
5V_CI
C7011
100nF
GND
from Mstar via serial resistor
to Card I/F address bus input
V45A00007900
TC74VHCT244AFK E, K
[VHCT244]
IC710
EN1
EN2
707:6D M_SBA7 M_SBA7
707:6D M_SBA6 M_SBA6
707:6E M_SBA5 M_SBA5
707:6E M_SBA4 M_SBA4
707:6E M_SBA3 M_SBA3
707:6E M_SBA2 M_SBA2
707:6E M_SBA1 M_SBA1
707:6E M_SBA0 M_SBA0
D_MA7I D_MA7I 703:8D
D_MA6I D_MA6I 703:8D
D_MA5I D_MA5I 703:8D
D_MA4I D_MA4I 703:8D
D_MA3I D_MA3I 703:8D
D_MA2I D_MA2I 703:8D
D_MA1I D_MA1I 703:8D
D_MA0I D_MA0I 703:8D
5V_CI
C7012
100nF
GND
3V to 5V Level shift
U03AS MAIN [704] DVB-CI I/F LOGIC4 (PE0630)

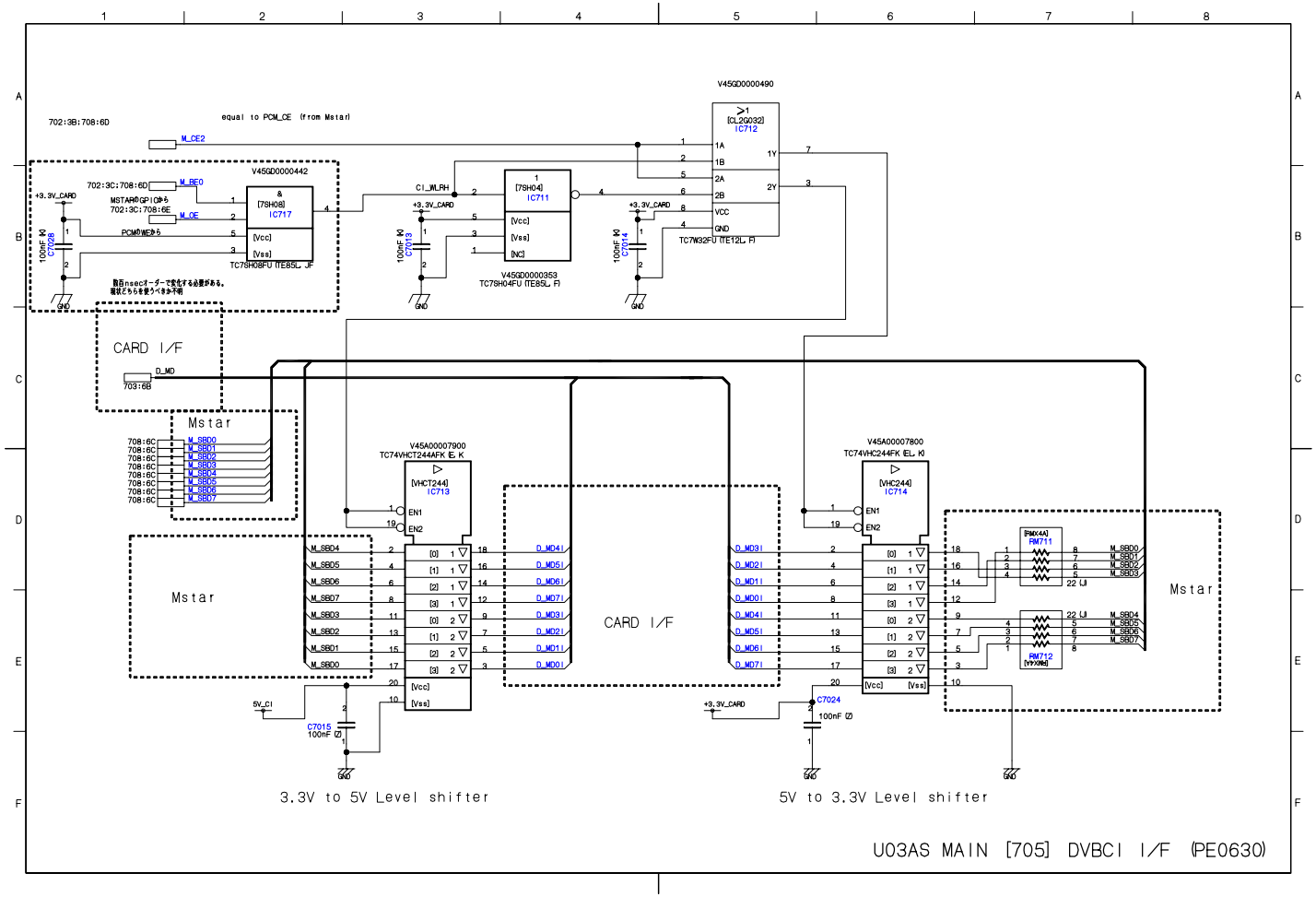
V45GD0000490
[CL20232]
IC712
1A
1B
2A
2B
VCC
GND
1Y
2Y
TC7W32FU (TE12L, F)
equal to PCM_CE (from Mstar)
702:3B:708:6D
M_CE2
V45GD0000442
&
[7SH08]
IC717
[Vcc]
[Vss]
TC7SH08FU (TE85L, JF
702:3C:708:6D
M_BE0
MSTARのGPIOから
702:3C:708:6E
M_OE
PCMのWEから
+3.3V_CARD
100nF (K)
C7028
GND
数百nsecオーダーで変化する必要がある。
現状どちらを使うべきか不明
CI_WLRH
[7SH04]
IC711
[NC]
V45GD0000353
TC7SH04FU (TE85L, F)
C7013
C7014
CARD I/F
D_MD
703:6B
Mstar
708:6C
M_SBD0
M_SBD1
M_SBD2
M_SBD3
M_SBD4
M_SBD5
M_SBD6
M_SBD7
V45A00007900
TC74VHCT244AFK (E, K
[VHCT244]
IC713
EN1
EN2
[0]
[1]
[2]
[3]
[Vcc]
[Vss]
D_MD4I
D_MD5I
D_MD6I
D_MD7I
D_MD3I
D_MD2I
D_MD1I
D_MD0I
5V_CI
C7015
100nF (Z)
3.3V to 5V Level shifter
V45A00007800
TC74VHC244FK (EL, K)
[VHC244]
IC714
C7024
100nF (Z)
[RMX44]
RM711
22 (J)
RM712
[VRXN6]
5V to 3.3V Level shifter
U03AS MAIN [705] DVBCI I/F (PE0630)

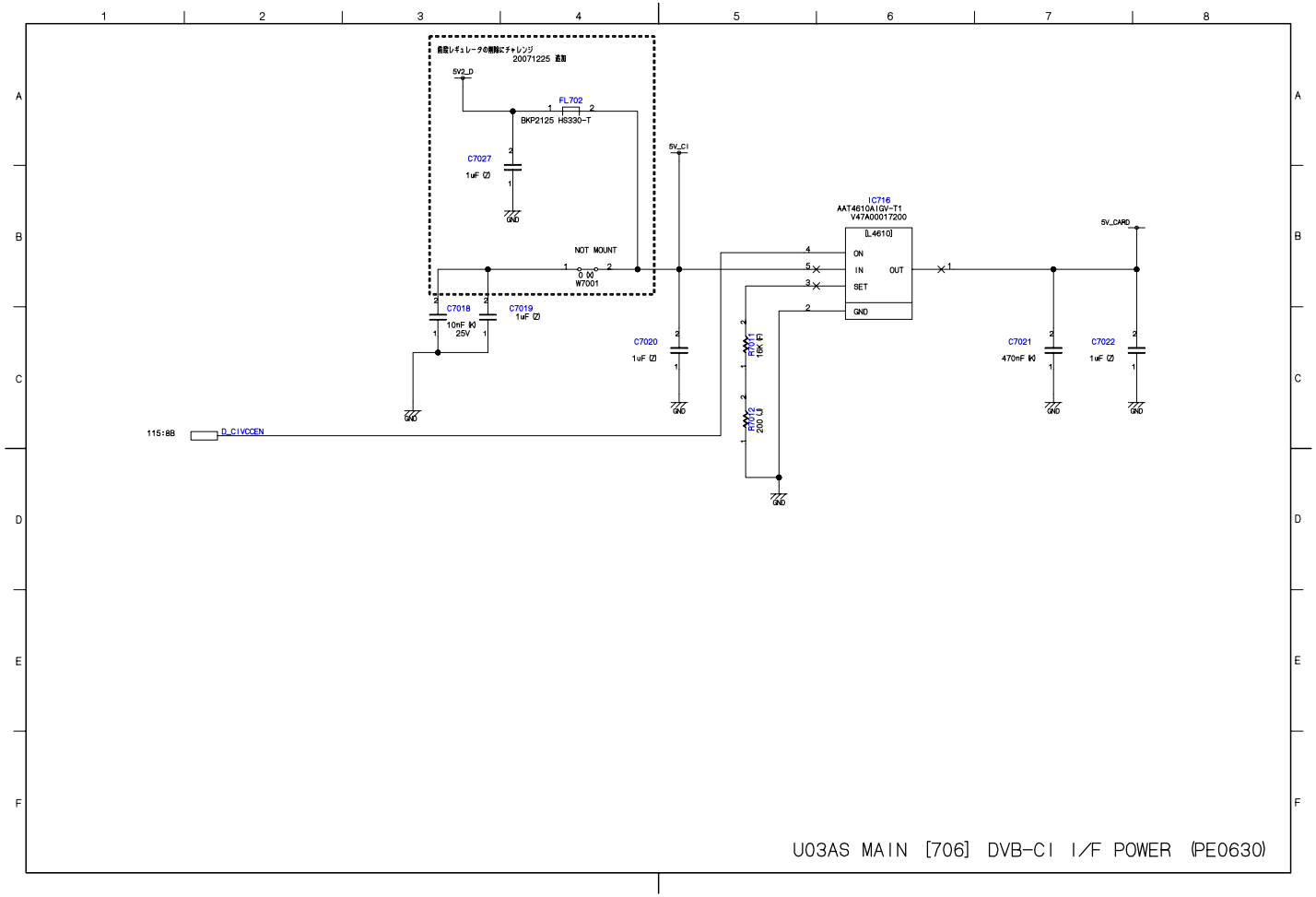

U03AS MAIN [706] DVB-CI I/F POWER (PE0630)

20071218 PULL UP PULL DOWN DELETED

20071220 +3.3V_VDDP and R1103 DELETED

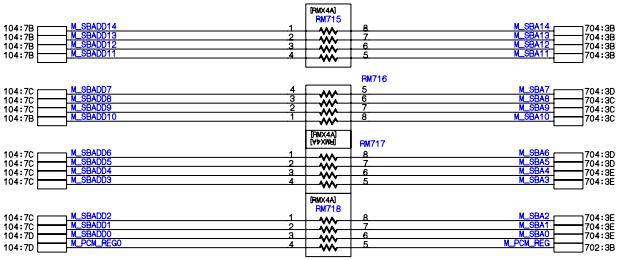

20071220 R1113 and R1120 and M_DEBUG_ON DELETED

U03AS MAIN [707] SLOWBUS PIN CONFIG (PE0630)

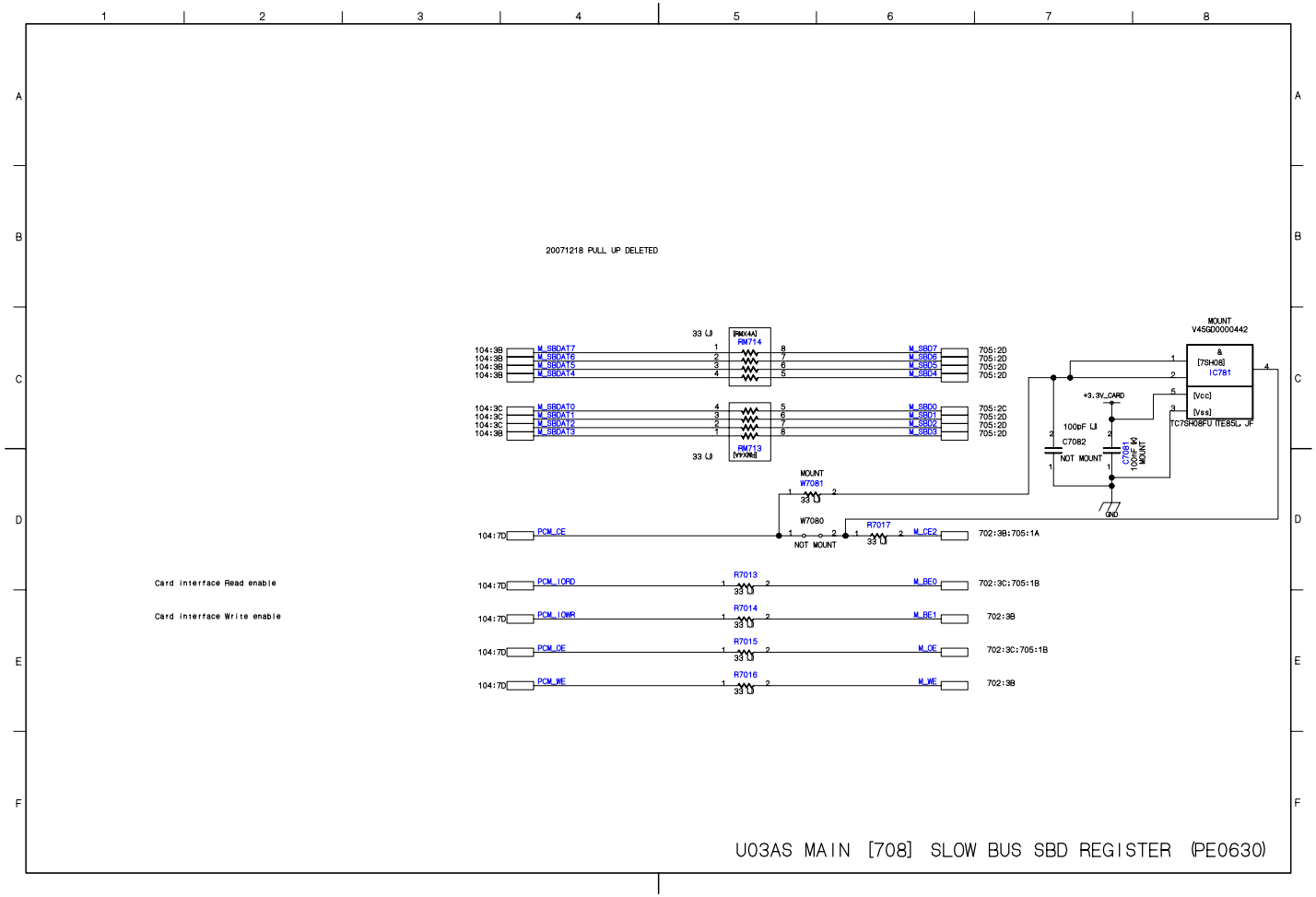

U03AS MAIN [708] SLOW BUS SBD REGISTER (PE0630)

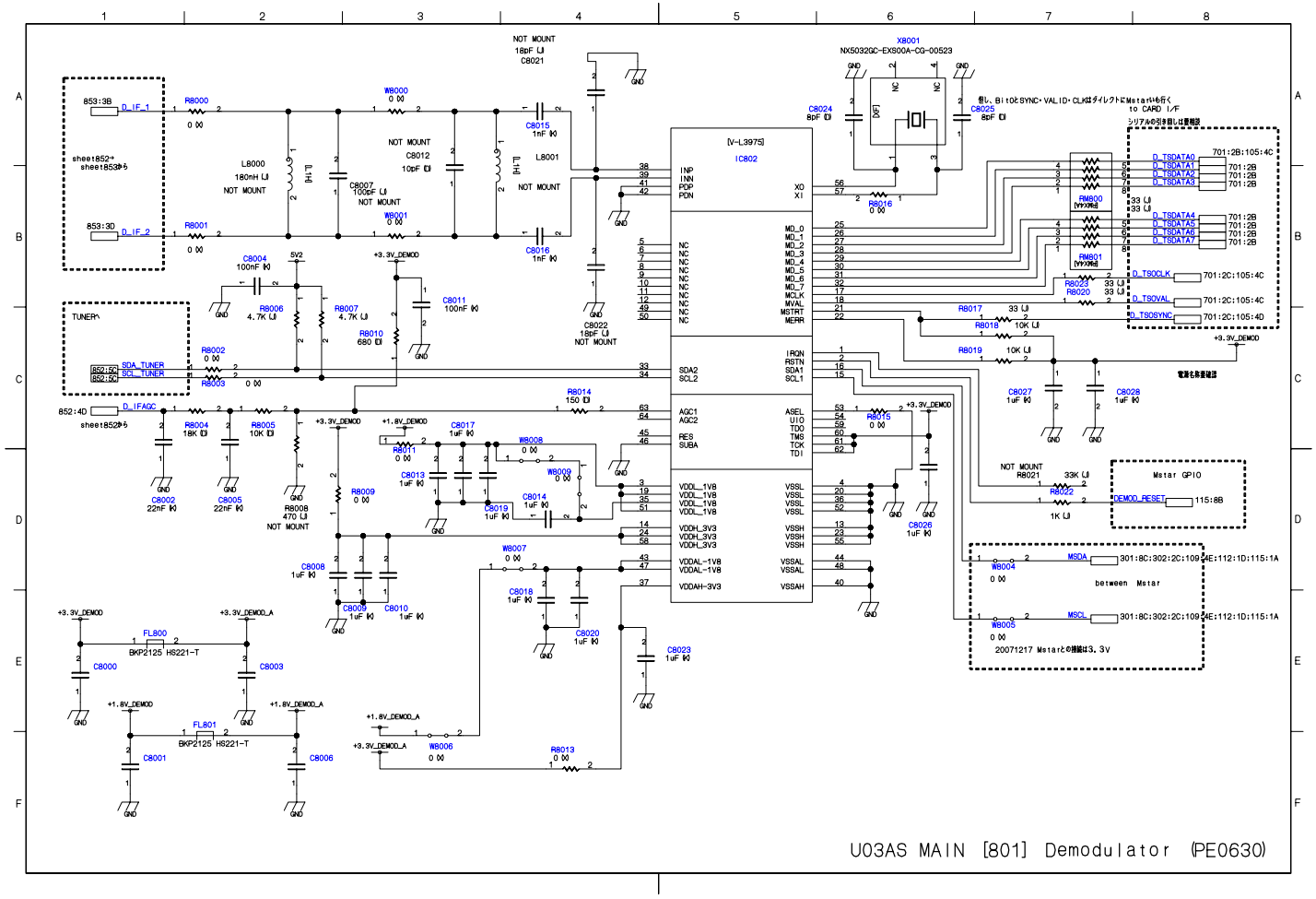
U03AS MAIN [801] Demodulator (PE0630)
IC802
[V-L3975]
X8001
NX5032GC-EXS00A-CG-00523
to CARD I/F
Mstar GPIO
between Mstar
TUNER
sheet852→ sheet853ﾍﾟｰｼﾞ
sheet852ﾍﾟｰｼﾞ
NOT MOUNT
20071217 Mstarとの接続は3.3V

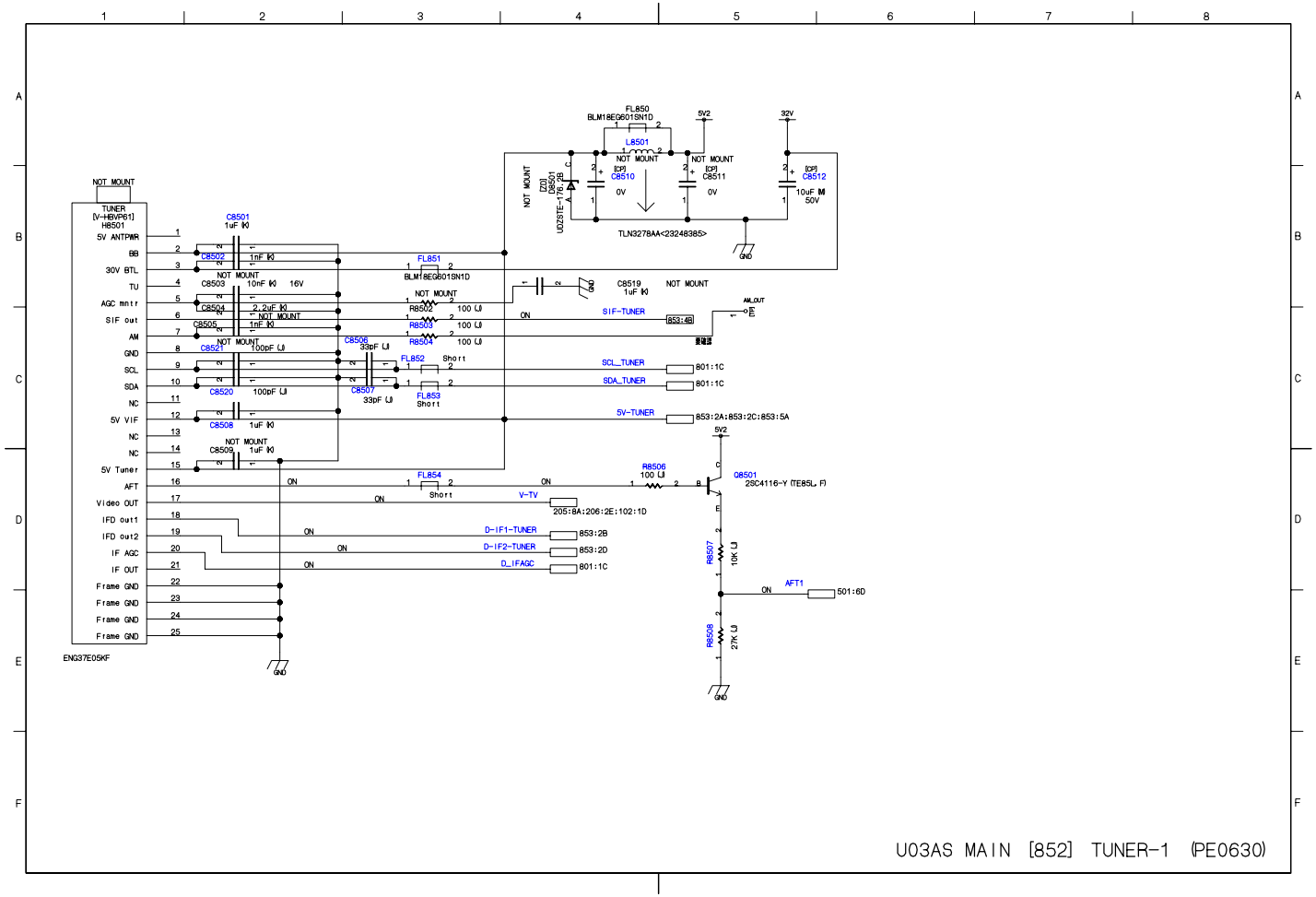

U03AS MAIN [852] TUNER-1 (PE0630)

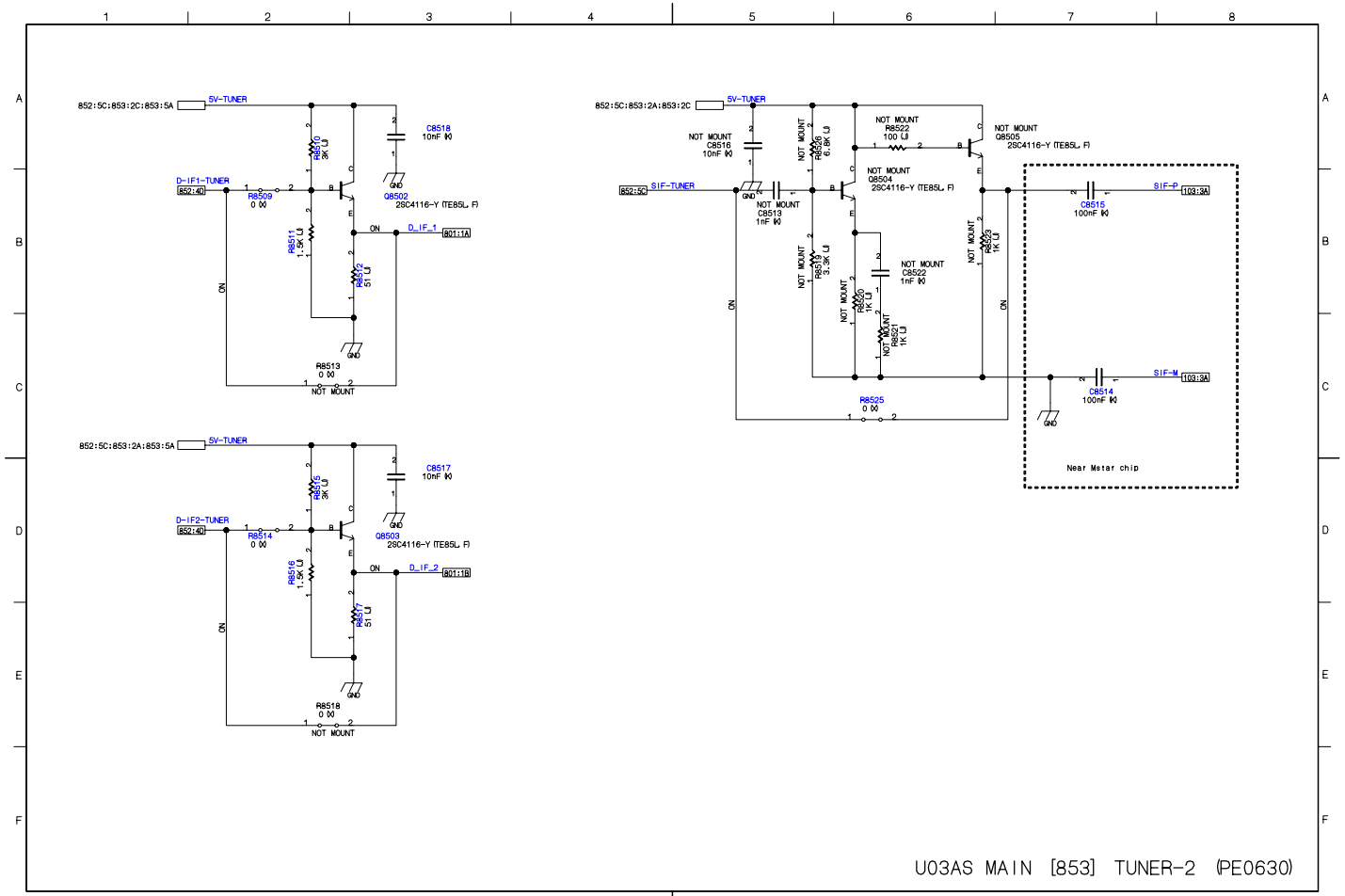

U03AS MAIN [853] TUNER-2 (PE0630)

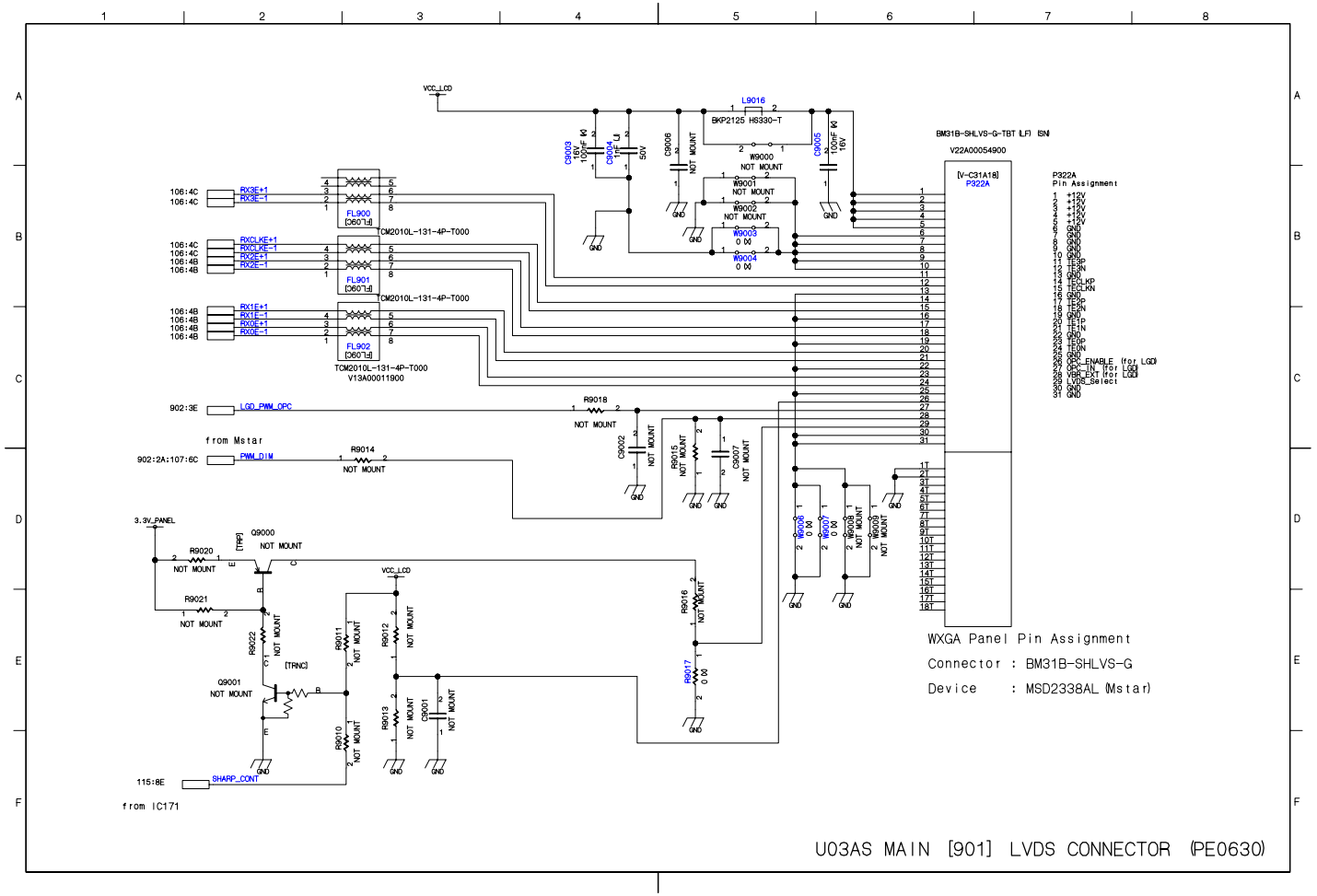

WXGA Panel Pin Assignment

Connector : BM31B-SHLVS-G

Device : MSD2338AL (Mstar)

U03AS MAIN [901] LVDS CONNECTOR (PE0630)

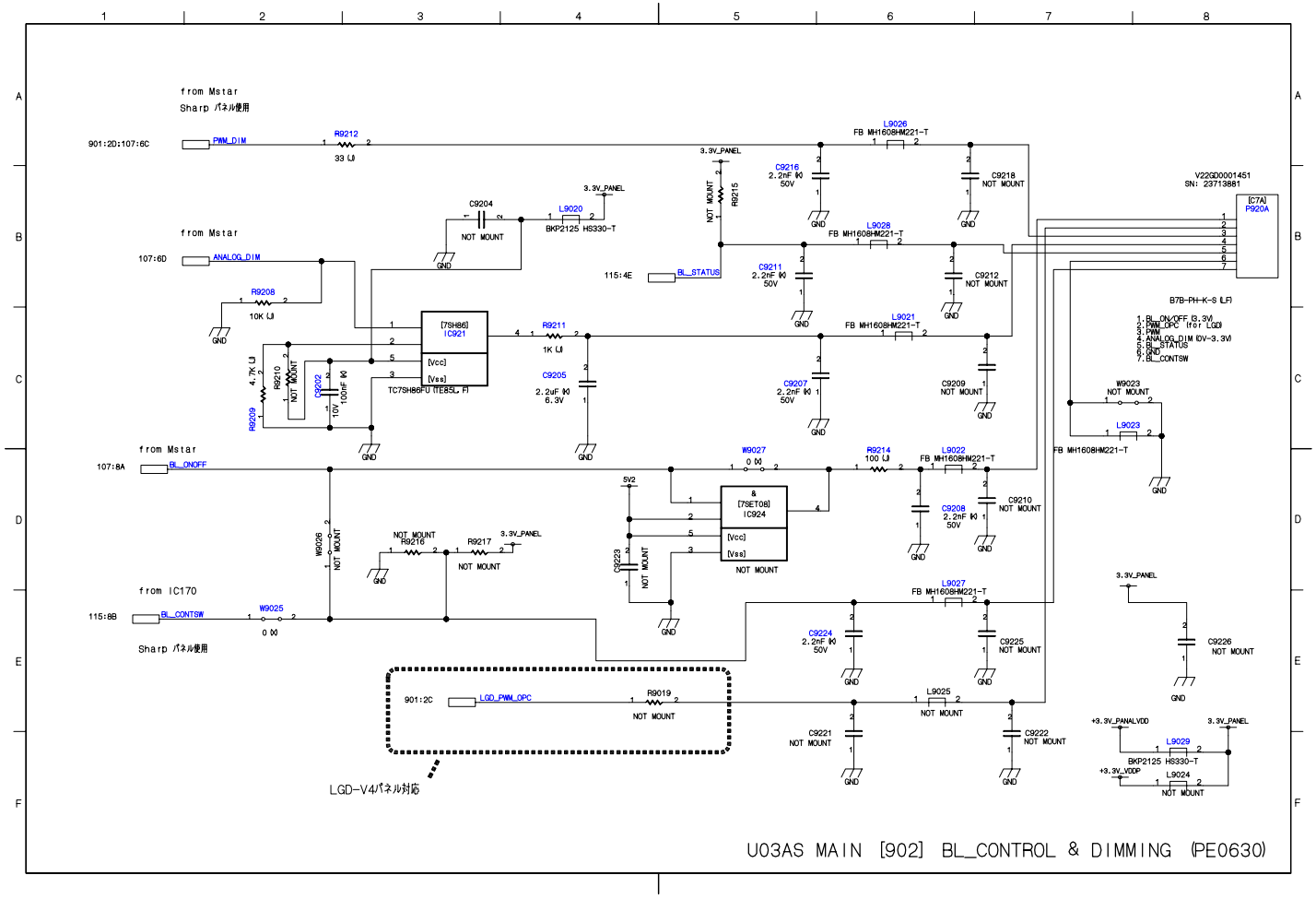

U03AS MAIN [902] BL_CONTROL & DIMMING (PE0630)

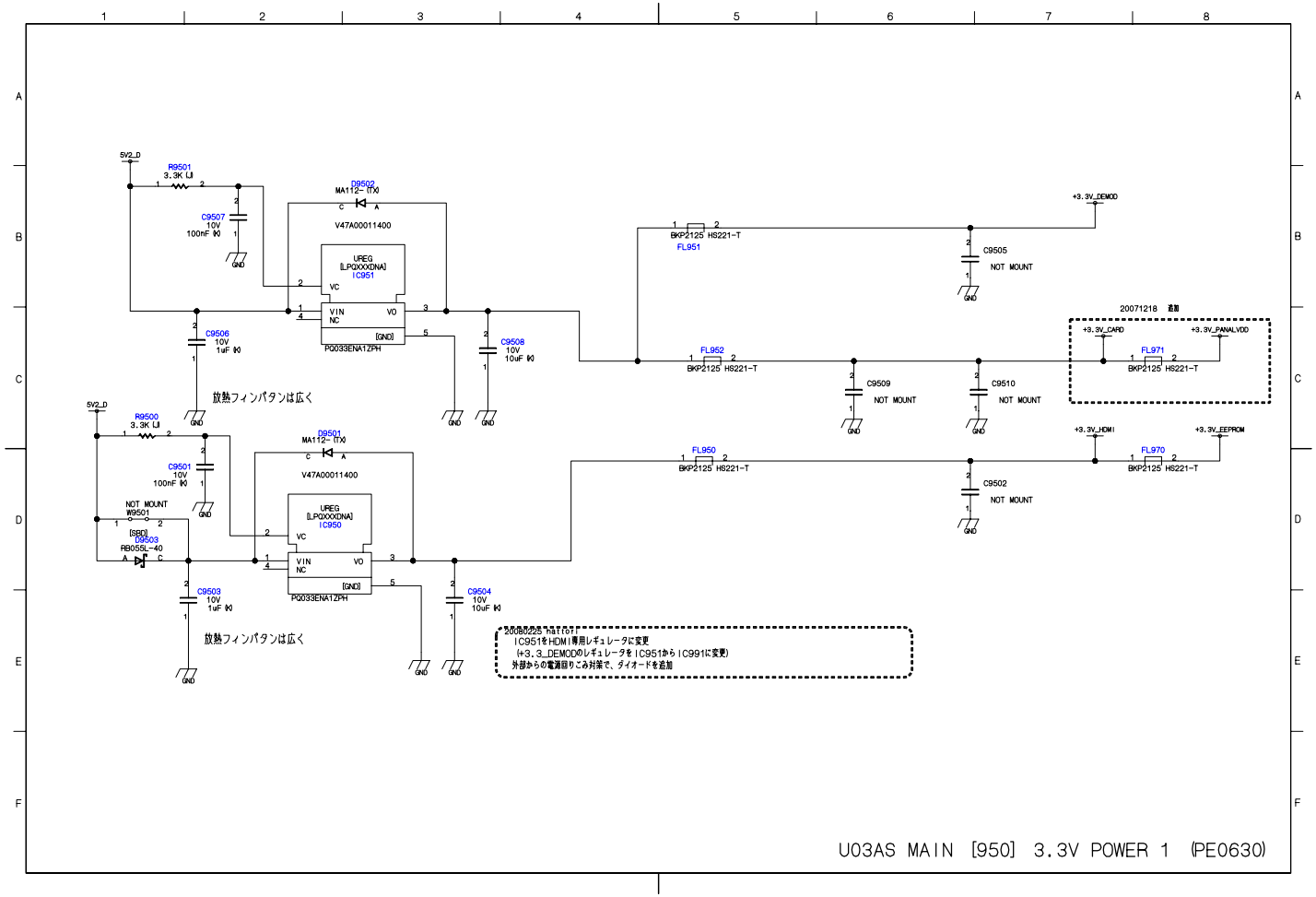

U03AS MAIN [950] 3.3V POWER 1 (PE0630)

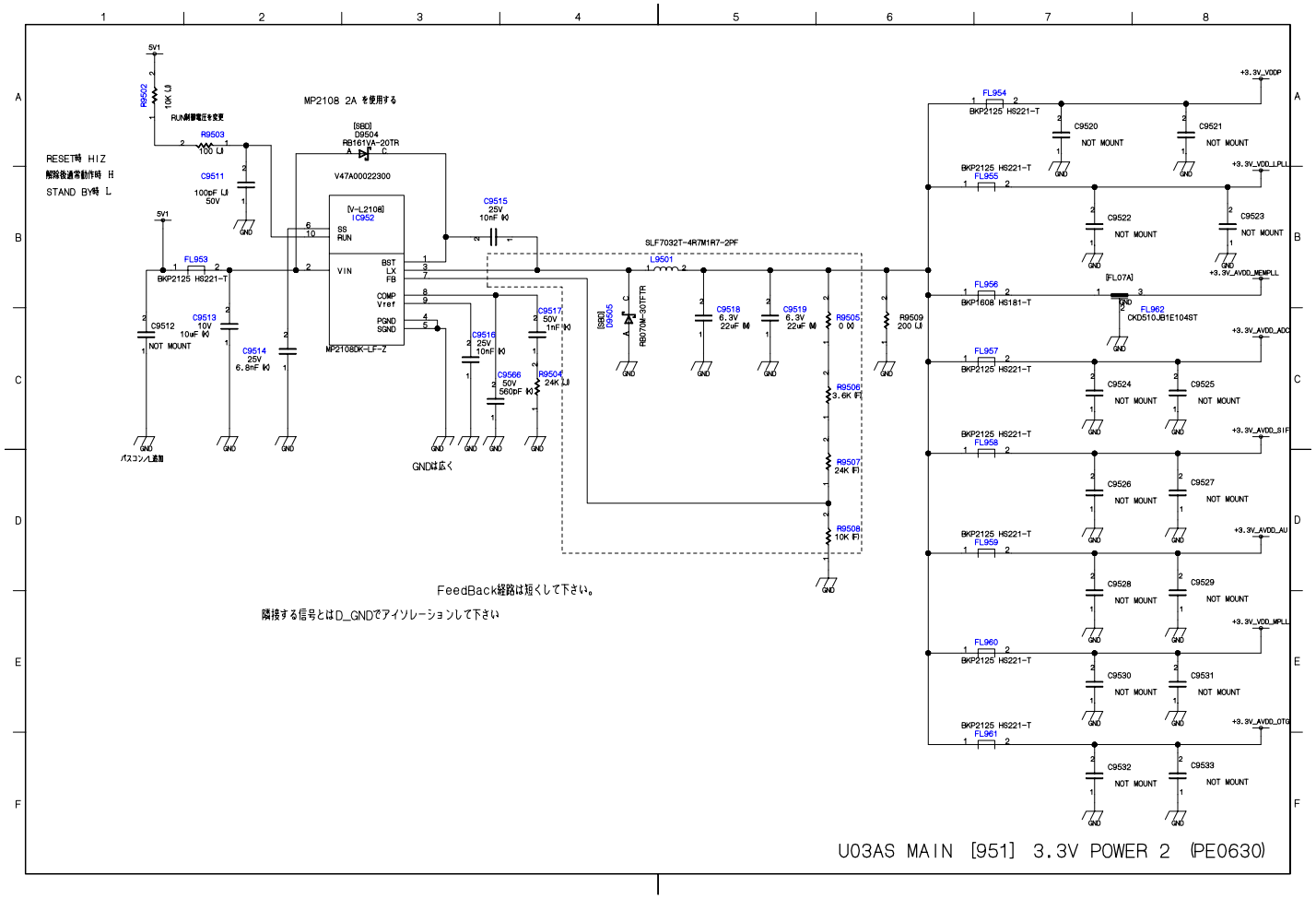
RESET時 HIZ
解除後通常動作時 H
STAND BY時 L
MP2108 2A を使用する
RUN制御電圧を変更
R9502 10K
R9503 100
C9511 100pF 50V
D9504 RB161VA-20TR
V47A00022300
IC952 [V-L2108]
SS RUN
VIN
BST LX FB
COMP Vref
PGND SGND
MP2108DK-LF-Z
C9515 25V 10nF
C9516 25V 10nF
C9517 50V 1nF
C9566 50V 560pF
R9504 24K
C9513 10V 10uF
C9514 25V 6.8nF
C9512 NOT MOUNT
FL953 BKP2125 HS221-T
パスコンL追加
GNDは広く
SLF7032T-4R7M1R7-2PF
L9501
D9505 RB070M-30TFTR
C9518 6.3V 22uF
C9519 6.3V 22uF
R9505 0
R9506 3.6K
R9507 24K
R9508 10K
R9509 200
FeedBack経路は短くして下さい。
隣接する信号とはD_GNDでアイソレーションして下さい
+3.3V_VDDP
FL954 BKP2125 HS221-T
C9520 NOT MOUNT
C9521 NOT MOUNT
+3.3V_VDD_LPLL
FL955 BKP2125 HS221-T
C9522 NOT MOUNT
C9523 NOT MOUNT
+3.3V_AVDD_MEMPLL
FL956 BKP1608 HS181-T
[FL07A]
FL962 CKD510JB1E104ST
+3.3V_AVDD_ADC
FL957 BKP2125 HS221-T
C9524 NOT MOUNT
C9525 NOT MOUNT
+3.3V_AVDD_SIF
FL958 BKP2125 HS221-T
C9526 NOT MOUNT
C9527 NOT MOUNT
+3.3V_AVDD_AU
FL959 BKP2125 HS221-T
C9528 NOT MOUNT
C9529 NOT MOUNT
+3.3V_VDD_MPLL
FL960 BKP2125 HS221-T
C9530 NOT MOUNT
C9531 NOT MOUNT
+3.3V_AVDD_OTG
FL961 BKP2125 HS221-T
C9532 NOT MOUNT
C9533 NOT MOUNT
U03AS MAIN [951] 3.3V POWER 2 (PE0630)

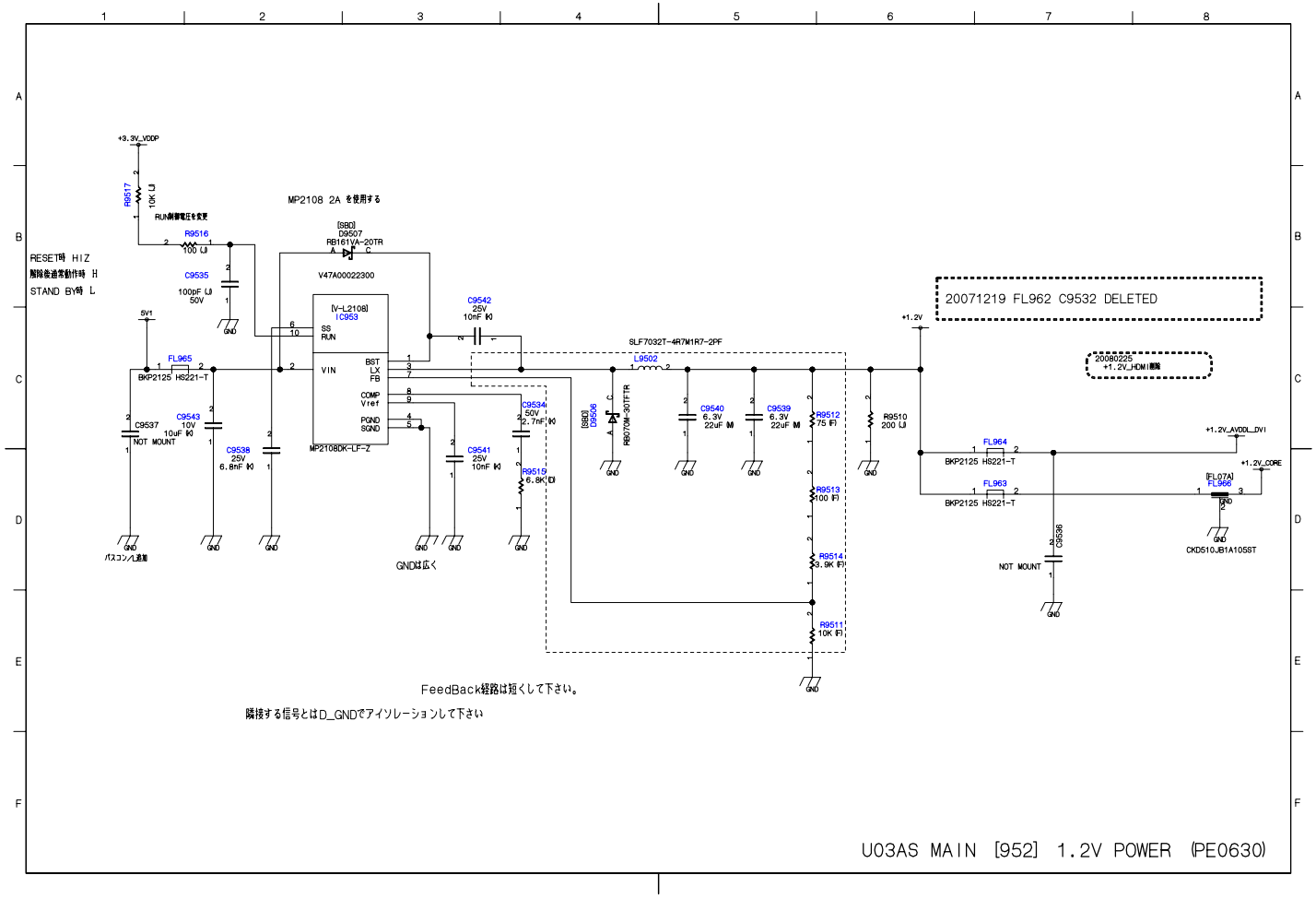
MP2108 2A を使用する
RESET時 HIZ
解除後通常動作時 H
STAND BY時 L
RUN制御電圧を変更
+3.3V_VDDP
R9517 10K (J)
R9516 100 (J)
C9535 100pF (J) 50V
[SBD] D9507 RB161VA-20TR
V47A00022300
[V-L2108] IC953
SS
RUN
VIN
BST
LX
FB
COMP
Vref
PGND
SGND
MP2108DK-LF-Z
5V1
FL965 BKP2125 HS221-T
C9537 NOT MOUNT
C9543 10V 10uF (K)
C9538 25V 6.8nF (K)
C9542 25V 10nF (K)
C9541 25V 10nF (K)
C9534 50V 2.7nF (K)
R9519 6.8K (D)
GNDは広く
パスコンパターン追加
SLF7032T-4R7M1R7-2PF
L9502
[SBD] D9506
RB070M-30TFTR
C9540 6.3V 22uF (M)
C9539 6.3V 22uF (M)
R9512 75 (F)
R9513 100 (F)
R9514 3.9K (F)
R9511 10K (F)
R9510 200 (J)
+1.2V
20071219 FL962 C9532 DELETED
20080225 +1.2V_HDMI追加
FL964 BKP2125 HS221-T
FL963 BKP2125 HS221-T
+1.2V_AVDDL_DVI
+1.2V_CORE
[FL07A] FL966
CKD510JB1A105ST
C9536 NOT MOUNT
FeedBack経路は短くして下さい。
隣接する信号とはD_GNDでアイソレーションして下さい
U03AS MAIN [952] 1.2V POWER (PE0630)

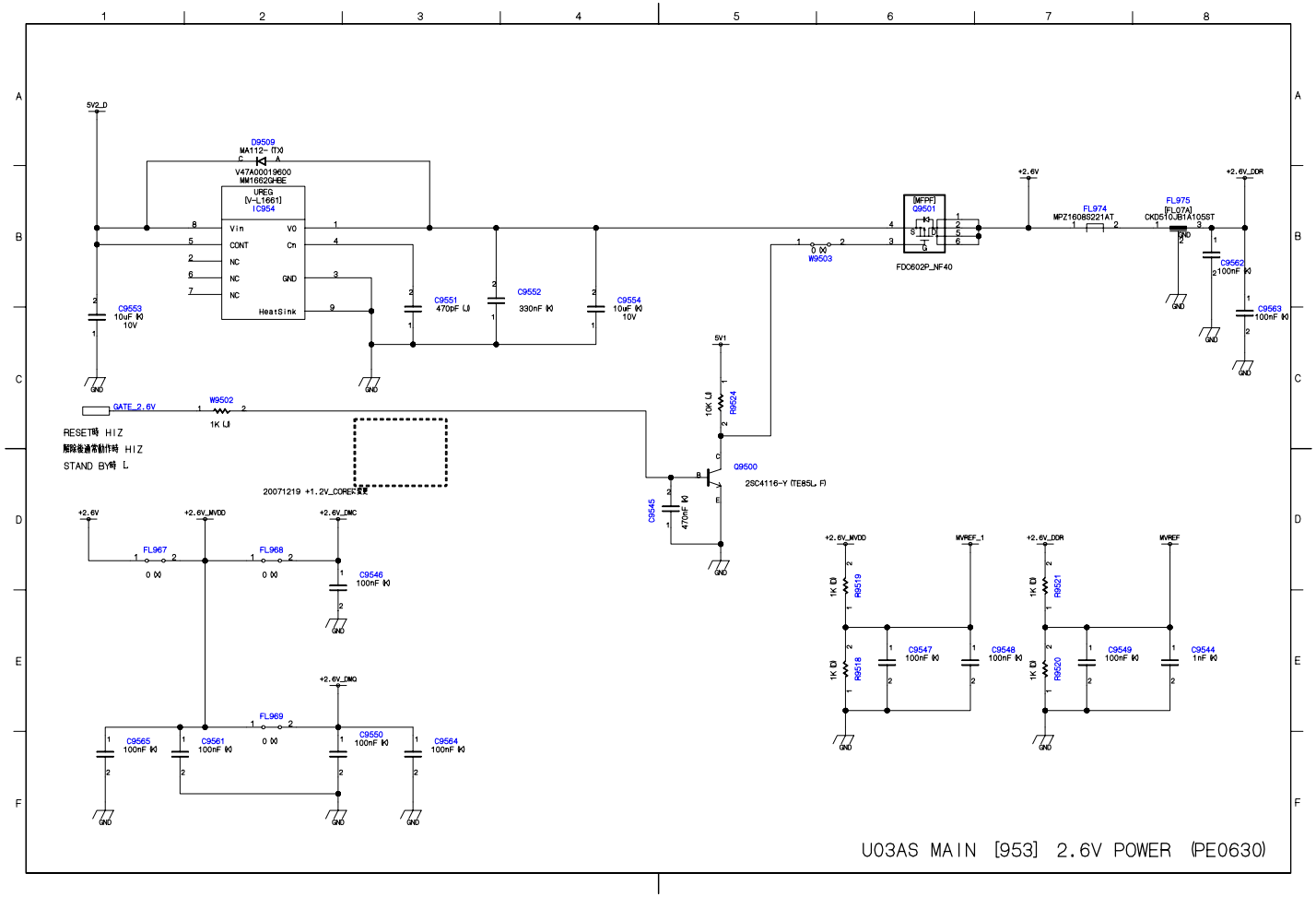

U03AS MAIN [953] 2.6V POWER (PE0630)

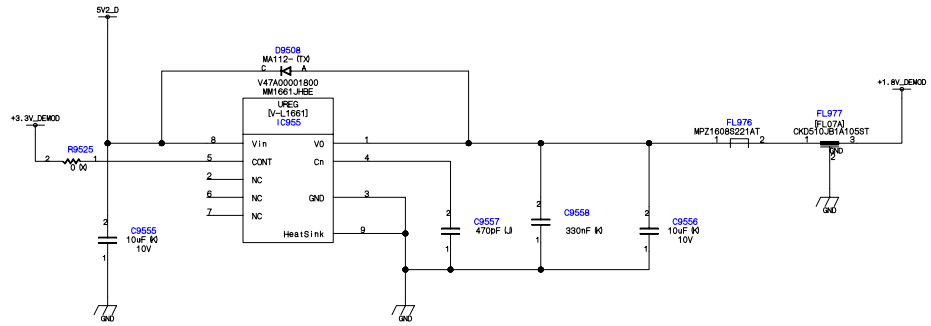

U03AS MAIN [954] 1.8V POWER (PE0630)

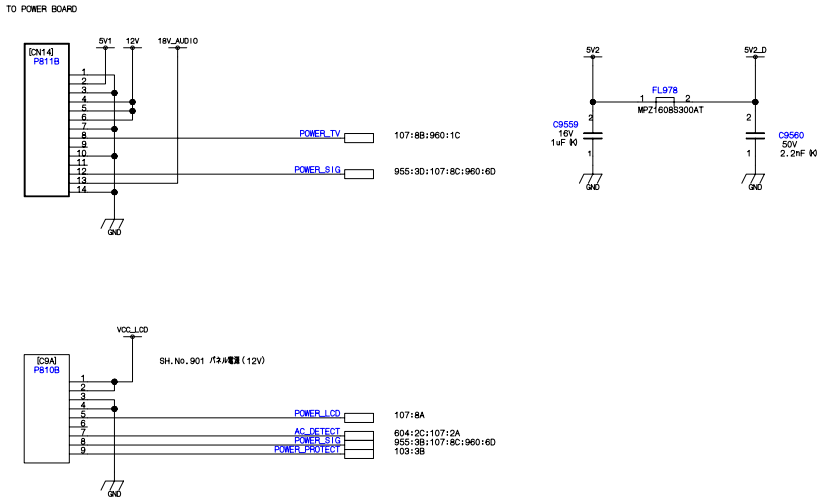

U03AS MAIN [955] SIGNAL/LOWB B-B (PE0630)

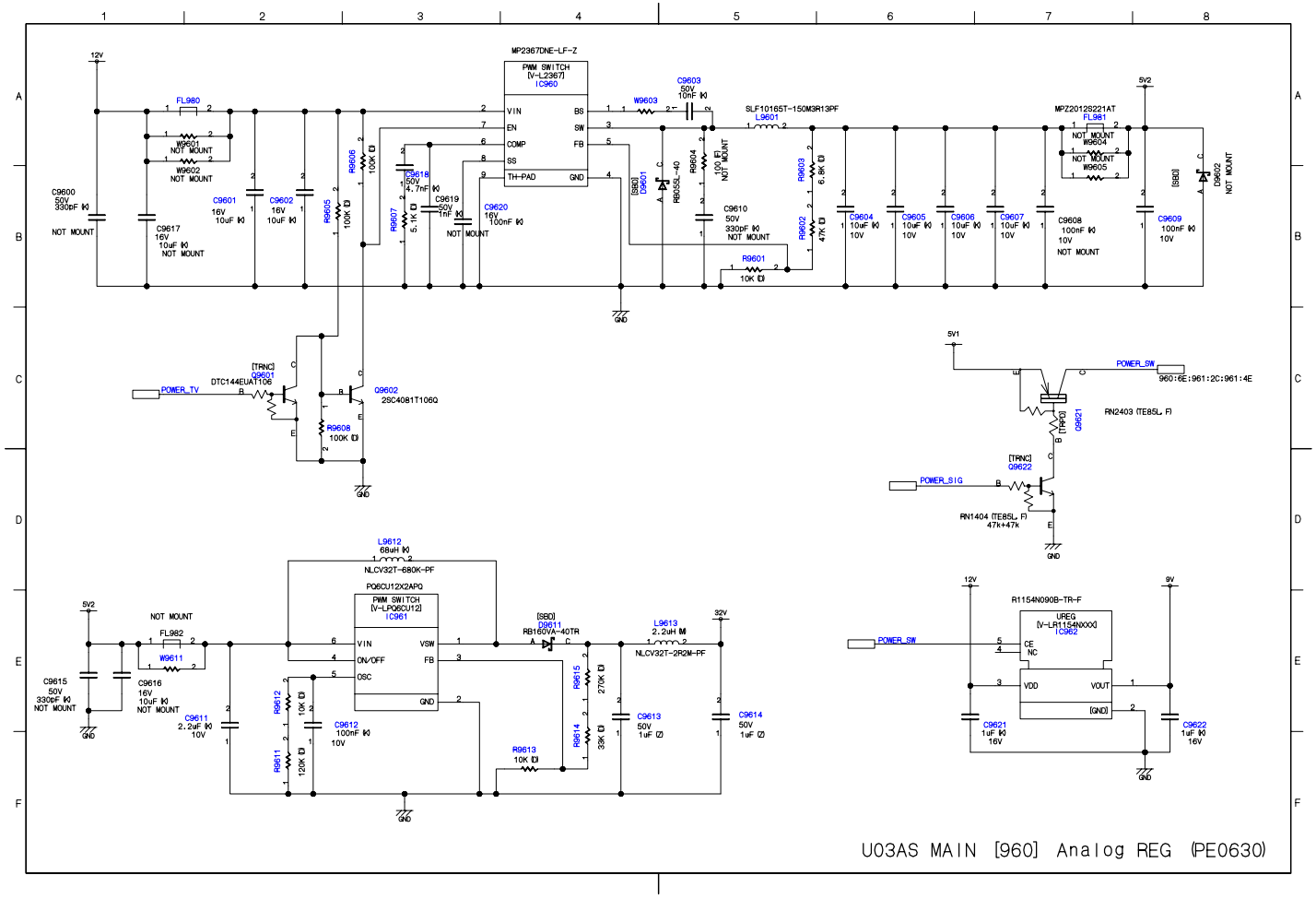
MP2367DNE-LF-Z
PWM SWITCH
[V-L2367]
IC960
VIN
EN
COMP
SS
TH-PAD
BS
SW
FB
GND
12V
5V2
5V1
32V
9V
FL980
W9601
NOT MOUNT
W9602
NOT MOUNT
C9600
50V
330pF
NOT MOUNT
C9617
16V
10uF
NOT MOUNT
C9601
16V
10uF
C9602
16V
10uF
R9605
100K
R9606
100K
C9618
50V
4.7nF
R9607
5.1K
C9619
50V
1nF
NOT MOUNT
C9620
16V
100nF
C9603
50V
10nF
W9603
SLF10165T-150M3R13PF
L9601
[SBD]
D9601
RB055L-40
R9604
100
NOT MOUNT
C9610
50V
330pF
NOT MOUNT
R9601
10K
R9603
6.8K
R9602
47K
C9604
10uF
10V
C9605
10uF
10V
C9606
10uF
10V
C9607
10uF
10V
C9608
100nF
10V
NOT MOUNT
MPZ20129221AT
FL981
W9604
NOT MOUNT
W9605
NOT MOUNT
C9609
100nF
10V
[SBD]
D9602
NOT MOUNT
POWER_TV
[TRNC]
Q9601
DTC144EUA106
Q9602
2SC4081T106Q
R9608
100K
POWER_SW
960:6E:961:2C:961:4E
RN2403 (TE85L, F)
Q9621
[TRNC]
Q9622
POWER_SIG
RN1404 (TE85L, F)
47k+47k
L9612
68uH
NLCV32T-680K-PF
PQ60J12X2APQ
PWM SWITCH
[V-LPQ60J12]
IC961
VIN
ON/OFF
OSC
VSW
FB
GND
[SBD]
D9611
RB160VA-40TR
L9613
2.2uH
NLCV32T-2R2M-PF
C9615
50V
330pF
NOT MOUNT
C9616
16V
10uF
NOT MOUNT
FL982
W9611
C9611
2.2uF
10V
R9612
10K
R9611
120K
C9612
100nF
10V
R9613
10K
R9615
270K
R9614
33K
C9613
50V
1uF
C9614
50V
1uF
R1154N090B-TR-F
UREG
[V-LR1154N000X]
IC962
CE
NC
VDD
VOUT
[GND]
C9621
1uF
16V
C9622
1uF
16V
U03AS MAIN [960] Analog REG (PE0630)

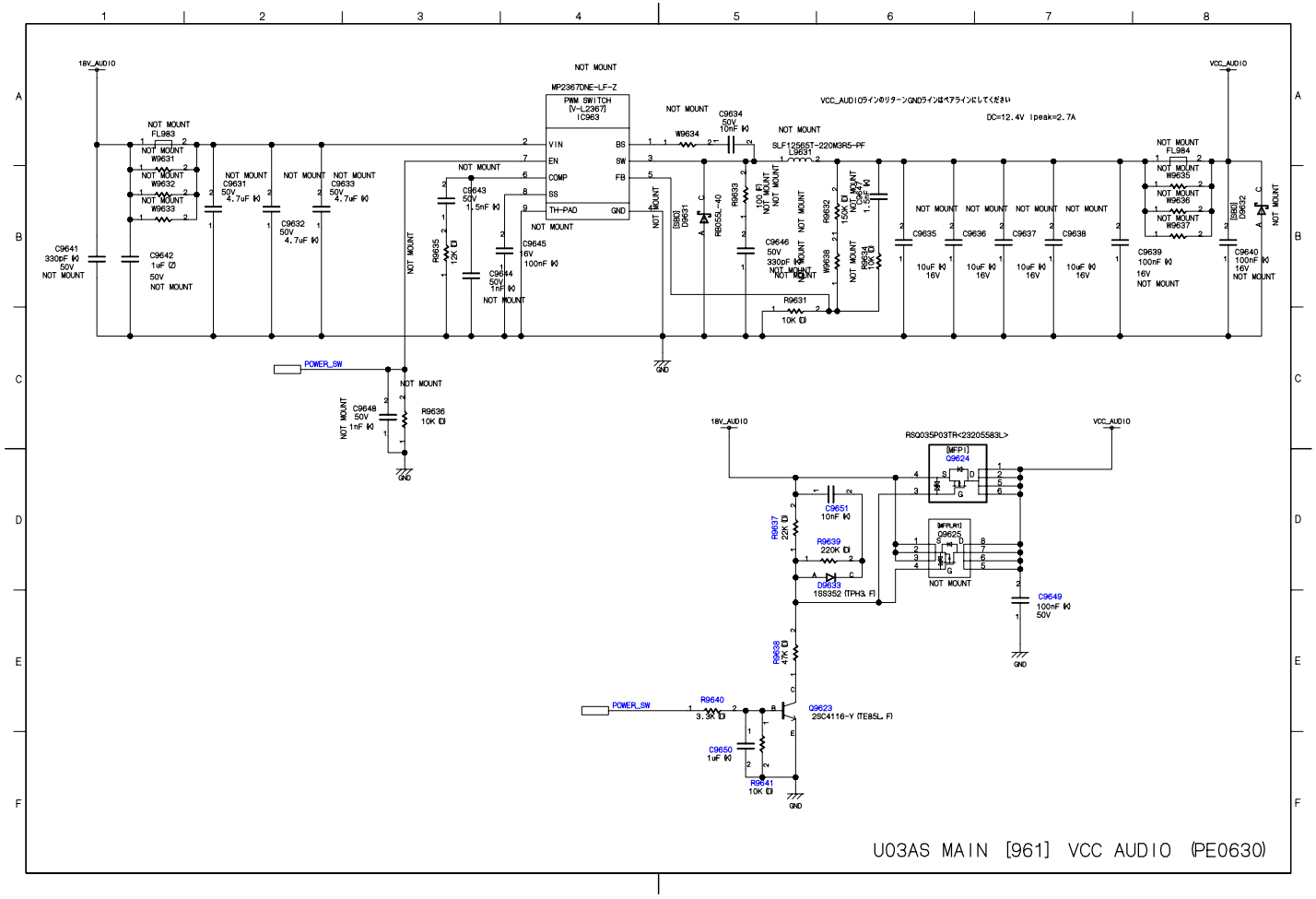

U03AS MAIN [961] VCC AUDIO (PE0630)

U02A KEY/LED/RMT [Bottom] (PE0491)

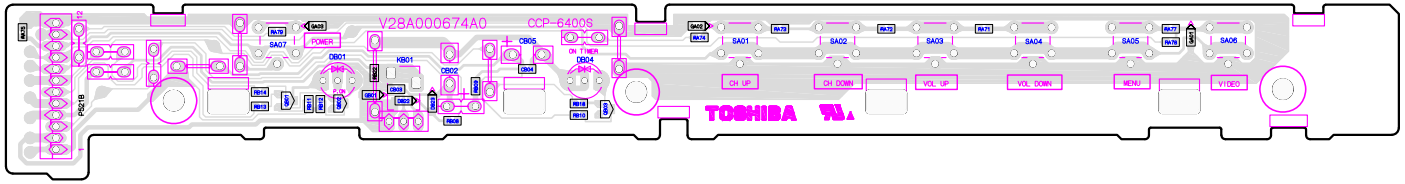

U03AS MAIN [Top] (PE0630)

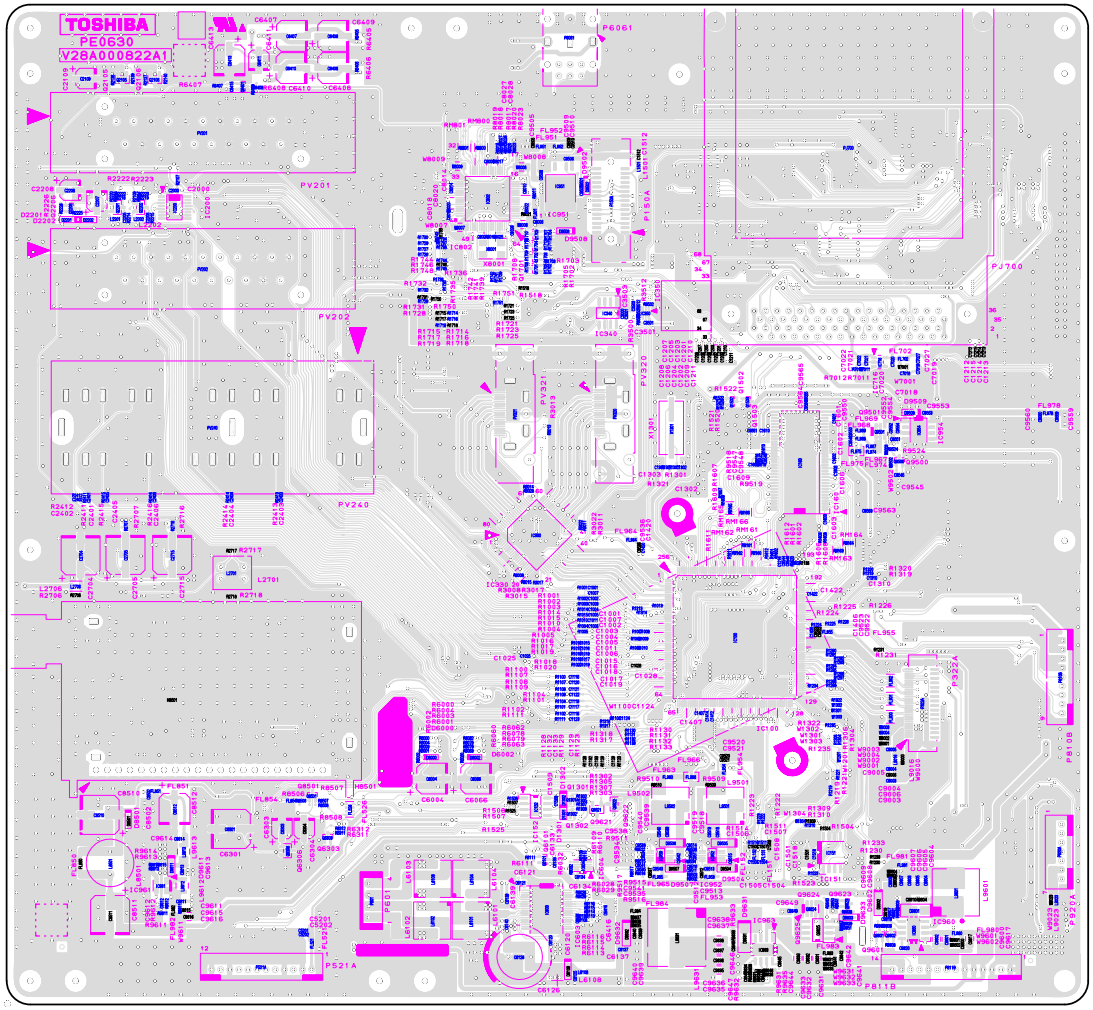

U03AS MAIN [Bottom] (PE0630)

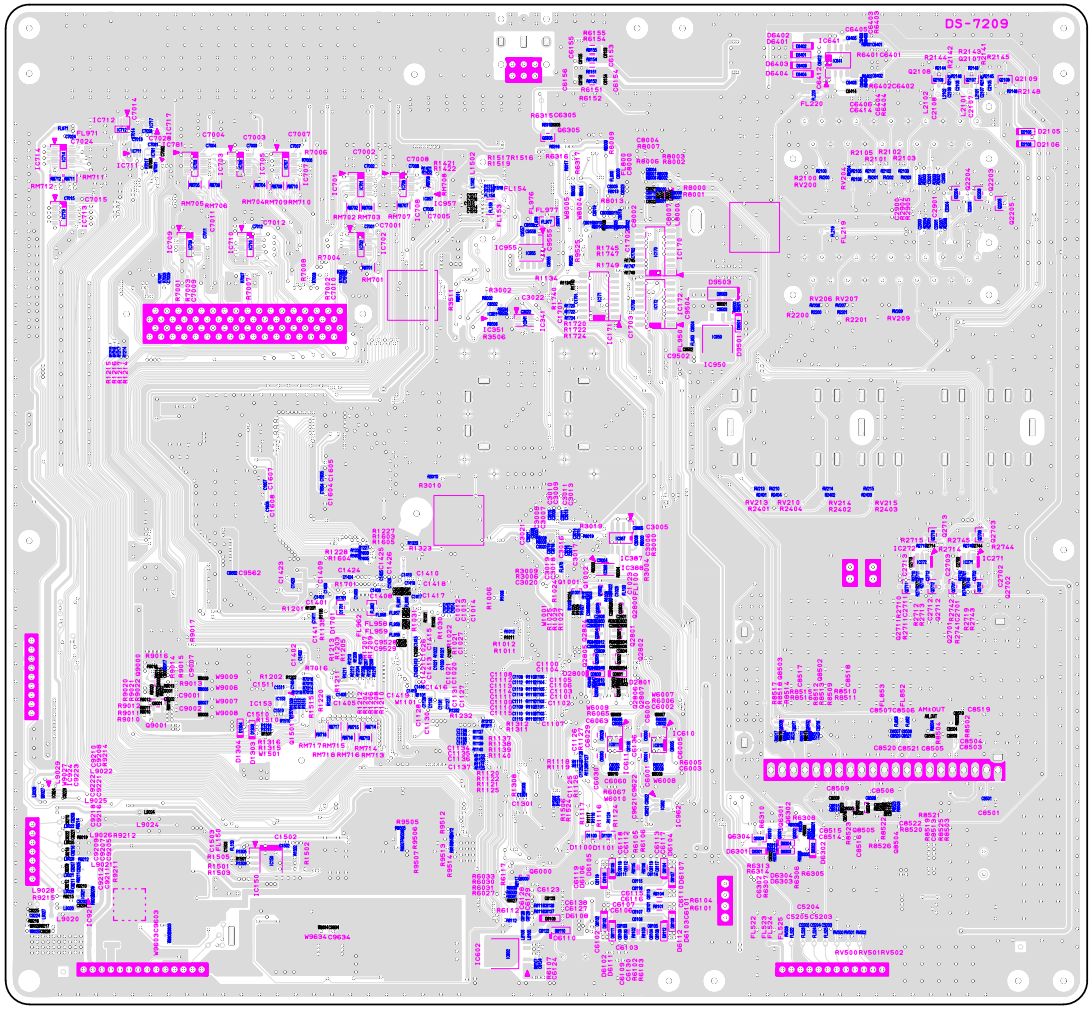

ADJUSTMENT

Service Mode

Entering to Service Mode

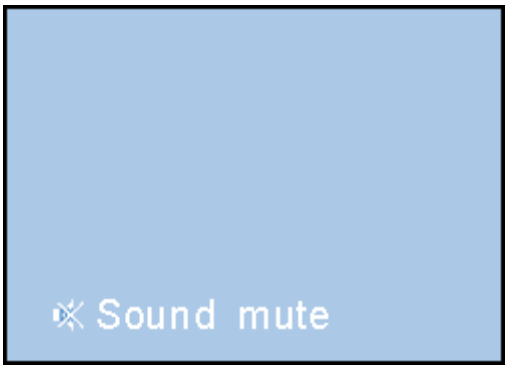

1. Set VOLUME to minimum and press button once on remote control.

↓

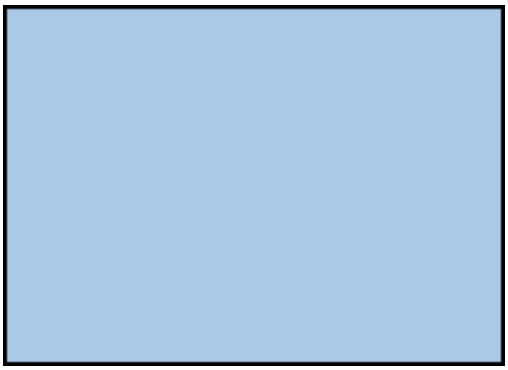

2. Press button again and hold button down.

↓

Service Mode display

3. While holding the button, press MENU button on TV set.

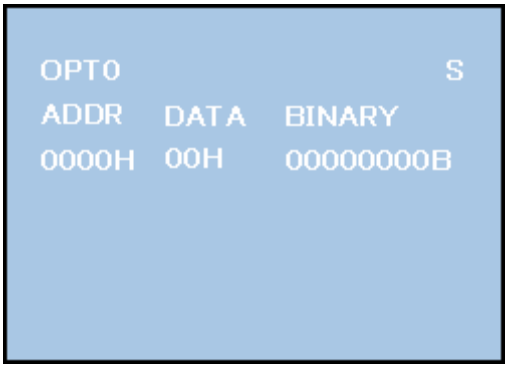

Displaying the Adjustment Menu

Press MENU button on TV.

Service Mode

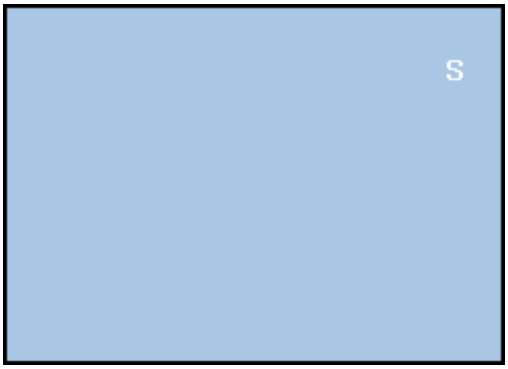

Press ↑ ↓ Press

Adjustment Mode

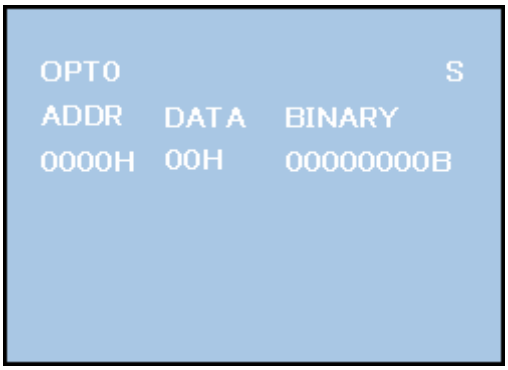

Key Function in the Service Mode

The following key entry during display of adjustment menu provides special functions.

CAUTION: Never try to perform initialization unless you have changed the memory IC.

Test signal selection	button (on remote control)
Selection of the adjustment items	CH ▲/▼ (on TV) or MENU ▲/▼ (on remote control)
Change of the data value	Volume +/- (on TV) or MENU RIGHT/LEFT (on remote control)
Adjustment menu mode ON/OFF	MENU button (on TV)
Initialization of the memory (IC152)	CALL + CH ▲ button on TV
Automatic A/D Adjustment (Component, Composite (PAL, NTSC), RGB)	7 button
Self diagnostic display ON/OFF	9 button

Selecting the Adjusting Item

Every pressing of MENU UP ▲ button in the service mode changes the adjustment items in the order of table below. (MENU DOWN ▼ button for reverse order)

SETTING & ADJUSTING DATA

[SERVICE MODE]

ADJUSTING ITEMS AND DATA IN THE SERVICE MODE:

Note:

The image system data of RCUT-BDRV is different by each image format.
The PAL value is indicated in the table.
Never adjust H.POS and V.POS except PAL/WIDE mode.

Item	Name of adjustment
PLLW0	PLL WAIT TIME
PLLW1	PLL WAIT TIME
PLLW2	PLL WAIT TIME
PLLW3	PLL WAIT TIME
PLLW4	PLL WAIT TIME
PLLW5	PLL WAIT TIME
OPT1	TV SET OPTION 1
OPT2	TV SET OPTION 2
OPT3	TV SET OPTION 3
OPT4	TV SET OPTION 4 (PANEL OPT DATA FOR VENDOR)
OPT5	TV SET OPTION 5 (PANEL OPT DATA FOR INCH)
OPT6	TV SET OPTION 6 (HOTEL MODE)
OPT7	TV SET OPTION 7 (HOTEL MODE)
OPT8	TV SET OPTION 8 (HOTEL MODE)
TVOP	TV SET OPTION
ID	MODEL ID
BDWID	BORDER WIDTH FOR EXACT SCAN
BDHIT	BORDER HEIGHT FOR EXACT SCAN
VOLUX	MAX VOLUME LIMITED
RCUT	R CUT OFF
GCUT	G CUT OFF
BCUT	B CUT OFF
RDRV	R DRIVE
GDRV	G DRIVE
BDRV	B DRIVE

CNTX DTV DYNAMIC	CONTRAST MAX FOR DTV DYNAMIC
CNTX DTV STANDARD	CONTRAST MAX FOR DTV STANDARD
CNTX DTV MILD	CONTRAST MAX FOR DTV MILD
CNTX DTV MOVIE	CONTRAST MAX FOR DTV MOVIE
CNTX VIDEO DYNAMIC	CONTRAST MAX FOR VIDEO DYNAMIC
CNTX VIDEO STANDARD	CONTRAST MAX FOR VIDEO STANDARD
CNTX VIDEO MILD	CONTRAST MAX FOR VIDEO MILD
CNTX VIDEO MOVIE	CONTRAST MAX FOR VIDEO MOVIE
CNTX YPBPR HD DYNAMIC	CONTRAST MAX FOR YPBPR HD DYNAMIC
CNTX YPBPR HD STANDARD	CONTRAST MAX FOR YPBPR HD STANDARD
CNTX YPBPR HD MILD	CONTRAST MAX FOR YPBPR HD MILD
CNTX YPBPR HD MOVIE	CONTRAST MAX FOR YPBPR HD MOVIE
CNTX YPBPR SD STANDARD	CONTRAST MAX FOR YPBPR SD STANDARD
CNTX YPBPR SD MILD	CONTRAST MAX FOR YPBPR SD MILD
CNTX YPBPR SD MOVIE	CONTRAST MAX FOR YPBPR SD MOVIE
CNTX HDMI PC DYNAMIC	CONTRAST MAX FOR HDMI PC DYNAMIC
CNTX HDMI PC STANDARD	CONTRAST MAX FOR HDMI PC STANDARD
CNTX HDMI PC MILD	CONTRAST MAX FOR HDMI PC MILD
CNTX HDMI PC MOVIE	CONTRAST MAX FOR HDMI PC MOVIE
CNTX HDMI HD DYNAMIC	CONTRAST MAX FOR HDMI HD DYNAMIC
CNTX HDMI HD STANDARD	CONTRAST MAX FOR HDMI HD STANDARD
CNTX HDMI HD MILD	CONTRAST MAX FOR HDMI HD MILD
CNTX HDMI HD MOVIE	CONTRAST MAX FOR HDMI HD MOVIE
CNTX HDMI SD DYNAMIC	CONTRAST MAX FOR HDMI SD DYNAMIC
CNTX HDMI SD STANDARD	CONTRAST MAX FOR HDMI SD STANDARD
CNTX HDMI SD MILD	CONTRAST MAX FOR HDMI SD MILD
CNTX HDMI SD MOVIE	CONTRAST MAX FOR HDMI SD MOVIE
CNTX ATV DYNAMIC	CONTRAST MAX FOR ATV DYNAMIC
CNTX ATV STANDARD	CONTRAST MAX FOR ATV STANDARD
CNTX ATV MILD	CONTRAST MAX FOR ATV MILD

	CONTRAST MAX FOR ATV MOVIE
BRTC DTV DYNAMIC	BRIGHTNESS CENTER FOR DTV DYNAMIC
BRTC DTV STANDARD	BRIGHTNESS CENTER FOR DTV STANDARD
BRTC DTV MILD	BRIGHTNESS CENTER FOR DTV MILD
BRTC DTV MOVIE	BRIGHTNESS CENTER FOR DTV MOVIE
BRTC VIDEO DYNAMIC	BRIGHTNESS CENTER FOR VIDEO DYNAMIC
BRTC VIDEO STANDARD	BRIGHTNESS CENTER FOR VIDEO STANDARD
BRTC VIDEO MILD	BRIGHTNESS CENTER FOR VIDEO MILD
BRTC VIDEO MOVIE	BRIGHTNESS CENTER FOR VIDEO MOVIE
BRTC YPBPR HD DYNAMIC	BRIGHTNESS CENTER FOR YPBPR HD DYNAMIC
BRTC YPBPR HD STANDARD	BRIGHTNESS CENTER FOR YPBPR HD STANDARD
BRTC YPBPR HD MILD	BRIGHTNESS CENTER FOR YPBPR HD MILD
BRTC YPBPR HD MOVIE	BRIGHTNESS CENTER FOR YPBPR HD MOVIE
BRTC YPBPR SD DYNAMIC	BRIGHTNESS CENTER FOR YPBPR SD DYNAMIC
BRTC YPBPR SD STANDARD	BRIGHTNESS CENTER FOR YPBPR SD STANDARD
BRTC YPBPR SD MILD	BRIGHTNESS CENTER FOR YPBPR SD MILD
BRTC YPBPR SD MOVIE	BRIGHTNESS CENTER FOR YPBPR SD MOVIE
BRTC HDMI PC DYNAMIC	BRIGHTNESS CENTER FOR HDMI PC DYNAMIC
BRTC HDMI PC STANDARD	BRIGHTNESS CENTER FOR HDMI PC STANDARD
BRTC HDMI PC MILD	BRIGHTNESS CENTER FOR HDMI PC MILD
BRTC HDMI PC MOVIE	BRIGHTNESS CENTER FOR HDMI PC MOVIE
BRTC HDMI HD DYNAMIC	BRIGHTNESS CENTER FOR HDMI HD DYNAMIC
BRTC HDMI HD STANDARD	BRIGHTNESS CENTER FOR HDMI HD STANDARD
BRTC HDMI HD MILD	BRIGHTNESS CENTER FOR HDMI HD MILD
BRTC HDMI HD MOVIE	BRIGHTNESS CENTER FOR HDMI HD MOVIE
BRTC HDMI SD DYNAMIC	BRIGHTNESS CENTER FOR HDMI SD DYNAMIC
BRTC HDMI SD STANDARD	BRIGHTNESS CENTER FOR HDMI SD STANDARD
BRTC HDMI SD MILD	BRIGHTNESS CENTER FOR HDMI SD MILD
BRTC HDMI SD MOVIE	BRIGHTNESS CENTER FOR HDMI SD MOVIE
BRTC ATV DYNAMIC	BRIGHTNESS CENTER FOR ATV DYNAMIC

	BRIGHTNESS CENTER FOR ATV STANDARD
BRTC ATV MILD	BRIGHTNESS CENTER FOR ATV MILD
BRTC ATV MOVIE	BRIGHTNESS CENTER FOR ATV MOVIE
COLC DTV DYNAMIC	COLOR CENTER FOR DTV DYNAMIC
COLC DTV STANDARD	COLOR CENTER FOR DTV STANDARD
COLC DTV MILD	COLOR CENTER FOR DTV MILD
COLC DTV MOVIE	COLOR CENTER FOR DTV MOVIE
COLC VIDEO DYNAMIC	COLOR CENTER FOR VIDEO DYNAMIC
COLC VIDEO STANDARD	COLOR CENTER FOR VIDEO STANDARD
COLC VIDEO MILD	COLOR CENTER FOR VIDEO MILD
COLC VIDEO MOVIE	COLOR CENTER FOR VIDEO MOVIE
COLC YPBPR HD DYNAMIC	COLOR CENTER FOR YPBPR HD DYNAMIC
COLC YPBPR HD STANDARD	COLOR CENTER FOR YPBPR HD STANDARD
COLC YPBPR HD MILD	COLOR CENTER FOR YPBPR HD MILD
COLC YPBPR HD MOVIE	COLOR CENTER FOR YPBPR HD MOVIE
COLC YPBPR SD DYNAMIC	COLOR CENTER FOR YPBPR SD DYNAMIC
COLC YPBPR SD STANDARD	COLOR CENTER FOR YPBPR SD STANDARD
COLC YPBPR SD MILD	COLOR CENTER FOR YPBPR SD MILD
COLC YPBPR SD MOVIE	COLOR CENTER FOR YPBPR SD MOVIE
COLC HDMI PC DYNAMIC	COLOR CENTER FOR HDMI PC DYNAMIC
COLC HDMI PC STANDARD	COLOR CENTER FOR HDMI PC STANDARD
COLC HDMI PC MILD	COLOR CENTER FOR HDMI PC MILD
COLC HDMI PC MOVIE	COLOR CENTER FOR HDMI PC MOVIE
COLC HDMI HD DYNAMIC	COLOR CENTER FOR HDMI HD DYNAMIC
COLC HDMI HD STANDARD	COLOR CENTER FOR HDMI HD STANDARD
COLC HDMI HD MILD	COLOR CENTER FOR HDMI HD MILD
COLC HDMI HD MOVIE	COLOR CENTER FOR HDMI HD MOVIE
COLC HDMI SD DYNAMIC	COLOR CENTER FOR HDMI SD DYNAMIC
COLC HDMI SD STANDARD	COLOR CENTER FOR HDMI SD STANDARD
COLC HDMI SD MILD	COLOR CENTER FOR HDMI SD MILD

	COLOR CENTER FOR HDMI SD MOVIE
COLC ATV DYNAMIC	COLOR CENTER FOR ATV DYNAMIC
COLC ATV STANDARD	COLOR CENTER FOR ATV STANDARD
COLC ATV MILD	COLOR CENTER FOR ATV MILD
COLC ATV MOVIE	COLOR CENTER FOR ATV MOVIE
UVTT DTV DYNAMIC	BASE BAND TINT FOR DTV DYNAMIC
UVTT DTV STANDARD	BASE BAND TINT FOR DTV STANDARD
UVTT DTV MILD	BASE BAND TINT FOR DTV MILD
UVTT DTV MOVIE	BASE BAND TINT FOR DTV MOVIE
UVTT VIDEO DYNAMIC	BASE BAND TINT FOR VIDEO DYNAMIC
UVTT VIDEO STANDARD	BASE BAND TINT FOR VIDEO STANDARD
UVTT VIDEO MILD	BASE BAND TINT FOR VIDEO MILD
UVTT VIDEO MOVIE	BASE BAND TINT FOR VIDEO MOVIE
UVTT YPBPR HD DYNAMIC	BASE BAND TINT FOR YPBPR HD DYNAMIC
UVTT YPBPR HD STANDARD	BASE BAND TINT FOR YPBPR HD STANDARD
UVTT YPBPR HD MILD	BASE BAND TINT FOR YPBPR HD MILD
UVTT YPBPR HD MOVIE	BASE BAND TINT FOR YPBPR HD MOVIE
UVTT YPBPR SD DYNAMIC	BASE BAND TINT FOR YPBPR SD DYNAMIC
UVTT YPBPR SD STANDARD	BASE BAND TINT FOR YPBPR SD STANDARD
UVTT YPBPR SD MILD	BASE BAND TINT FOR YPBPR SD MILD
UVTT YPBPR SD MOVIE	BASE BAND TINT FOR YPBPR SD MOVIE
UVTT HDMI PC DYNAMIC	BASE BAND TINT FOR HDMI PC DYNAMIC
UVTT HDMI PC STANDARD	BASE BAND TINT FOR HDMI PC STANDARD
UVTT HDMI PC MILD	BASE BAND TINT FOR HDMI PC MILD
UVTT HDMI PC MOVIE	BASE BAND TINT FOR HDMI PC MOVIE
UVTT HDMI HD DYNAMIC	BASE BAND TINT FOR HDMI HD DYNAMIC
UVTT HDMI HD STANDARD	BASE BAND TINT FOR HDMI HD STANDARD
UVTT HDMI HD MILD	BASE BAND TINT FOR HDMI HD MILD
UVTT HDMI HD MOVIE	BASE BAND TINT FOR HDMI HD MOVIE
UVTT HDMI SD DYNAMIC	BASE BAND TINT FOR HDMI SD DYNAMIC

	BASE BAND TINT FOR HDMI SD STANDARD
UVTT HDMI SD MILD	BASE BAND TINT FOR HDMI SD MILD
UVTT HDMI SD MOVIE	BASE BAND TINT FOR HDMI SD MOVIE
UVTT ATV DYNAMIC	BASE BAND TINT FOR ATV DYNAMIC
UVTT ATV STANDARD	BASE BAND TINT FOR ATV STANDARD
UVTT ATV MILD	BASE BAND TINT FOR ATV MILD
UVTT ATV MOVIE	BASE BAND TINT FOR ATV MOVIE

Factory preset data will be loaded after setting Model ID data.
(Refer to Initialization of Memory Data of IC152 and setting data of signal board.)

Adjusting the Data

Pressing of MENU RIGHT/LEFT button will change the value of data in the range from 00H to FFH. The variable range depends on the adjusting item.

Setting TVOP

Enter to service mode and select menu of TVOP by pressing MENU UP or DOWN during display of adjustment menu. After selecting TVOP, press MENU RIGHT or LEFT to set WDT function to disable or enable as below.

TVOP	FUNCTION DESCRIPTION	1	0 (Normal)
D5 (bit5)	TV-Micon Watch Dog Timer (WDT)	Disable	Enable

Setting Panel Option Data

Panel option data is subject to OP4 and OP5.
Enter to service mode and select menu of OPT4 or OPT5 by pressing P▲ or P▼ during

display of adjustment menu. After selecting OPT4 or OPT5, press ◢ + or ◢ - to set OPT4 or OPT5 value as table below.

Panel option data

Series		Model name	Panel vendor	OPT4 value	OPT5 value
AV554D	EU Digital	32AV554D	SHARP	0x02	0x05
		37AV554D	LGD	0x01	0x06
		42AV554D	LGD	0x01	0x07

OPT4

Ex. OPT4 value 0x02 indicates that panel vendor is SHARP.

		OPT4							
		D7 (bit7)	D6 (bit6)	D5 (bit5)	D4 (bit4)	D3 (bit3)	D2 (bit2)	D1 (bit1)	D0 (bit0)
Panel vendor	LGD	-	-	-	-	0	0	0	1
	SHARP	-	-	-	-	0	0	1	0
	CMO	-	-	-	-	0	0	1	1
	AUO PMVA	-	-	-	-	0	1	0	0
	AUO AMVA	-	-	-	-	0	1	0	1
	SAMSUNG	-	-	-	-	0	1	1	0
	IPS	-	-	-	-	0	1	1	1

OPT5

Ex. OPT5 value 0x05 indicates that panel size is 32.

		OPT5							
		D7 (bit7)	D6 (bit6)	D5 (bit5)	D4 (bit4)	D3 (bit3)	D2 (bit2)	D1 (bit1)	D0 (bit0)
Size	26	-	-	-	-	0	0	1	1
	32	-	-	-	-	0	1	0	1
	37	-	-	-	-	0	1	1	0

	42	-	-	-	-	0	1	1	1
Backlight Status Logic	Positive	-	-	1	-	-	-	-	-
	Negative			0					
Backlight Status Check	Execute	-	1	-	-	-	-	-	-
	Unexecuted		0						
Backlight Force Twice On	Execute	1	-	-	-	-	-	-	-
	Unexecuted	0							

Convert from Bit (Binary) to Hex

The table for converting from bit (D7-D0) to hex (0x**).

		BIT (Binary)			
High nibble		**D7**	**D6**	**D5**	**D4**
Low nibble		**D3**	**D2**	**D1**	**D0**
HEX	**0**	0	0	0	0
	1	0	0	0	**1**
	2	0	0	**1**	0
	3	0	0	**1**	**1**
	4	0	**1**	0	0
	5	0	**1**	0	**1**
	6	0	**1**	**1**	0
	7	0	**1**	**1**	**1**
	8	**1**	0	0	0
	9	**1**	0	0	**1**
	A	**1**	0	**1**	0
	B	**1**	0	**1**	**1**
	C	**1**	**1**	0	0
	D	**1**	**1**	0	**1**

	E	**1**	**1**	**1**	0
	F	**1**	**1**	**1**	**1**

E.g. If Bit D7-0 = 0**1**0**1** **1**0**1**0, Hex data is 0x**5A**.

Exit from Service Mode

Pressing POWER button to turn off the TV once.

Initialization of Memory Data of IC152 and Setting Data of Signal Unit

After replacing IC152 or signal board, the following initialization is required.

CAUTION: Never attempt to initialize the data unless IC152 has been replaced.
Whenever using new signal board to the set, setting the Model ID data according to Panel option data.

1) Enter the service mode.

2) Select menu of ID by pressing P▲ or P▼ during display of adjustment menu in the service mode.

3) Change ID data into MODEL ID to initialize by pressing ◿ + or ◿ -, refer to table below.
   For example, if want to initialize 32AV555D, change MODEL ID into "0x01".
   Note:
   MODEL ID is hex value. For example, set value is not Decimal 11 but hex 11.

4) Press and hold the CALL button on the remote control, then press the CHANNEL ▲ button on the TV.

5) Initialization progress dialog including model name and panel vendor is shown. Progress status is "WRITING".

6) Progress status is changed "OK" and power cycle (automatically). Then IC152 initialization has been completed.

7) Enter the service mode and select version check mode. Confirm if model name and model id set is correct. If not, repeat steps 1) to 6).

Note:

In case initialization by setting wrong MODEL ID is done, there is a possibility of abnormal display.

8) Set I2C check function of TVOP to enable.

9) Check the picture carefully. If necessary, adjust any adjustment item above. Perform "Auto tune" on the owner's manual.

MODEL ID (HEX)	Model name	Panel vendor
0x01	32AV554D	SHARP
0x02	37AV554D	LGD
0x03	42AV554D	LGD
0x04		
0x05		
0x06		
0x07		
0x08		
0x09		
0x10		
0x11		
0x12		
0x13		
0x14		
0x15		

0x16		
0x17		
0x18		
0x19		
0x20		
0x21		
0x22		
0x23		
0x24		
0x25		
0x26		
0x27		
0x28		
0x29		
0x30		
0x31		
0x32		
0x33		

Initializing Data setting flowchart after replacing the Signal Unit

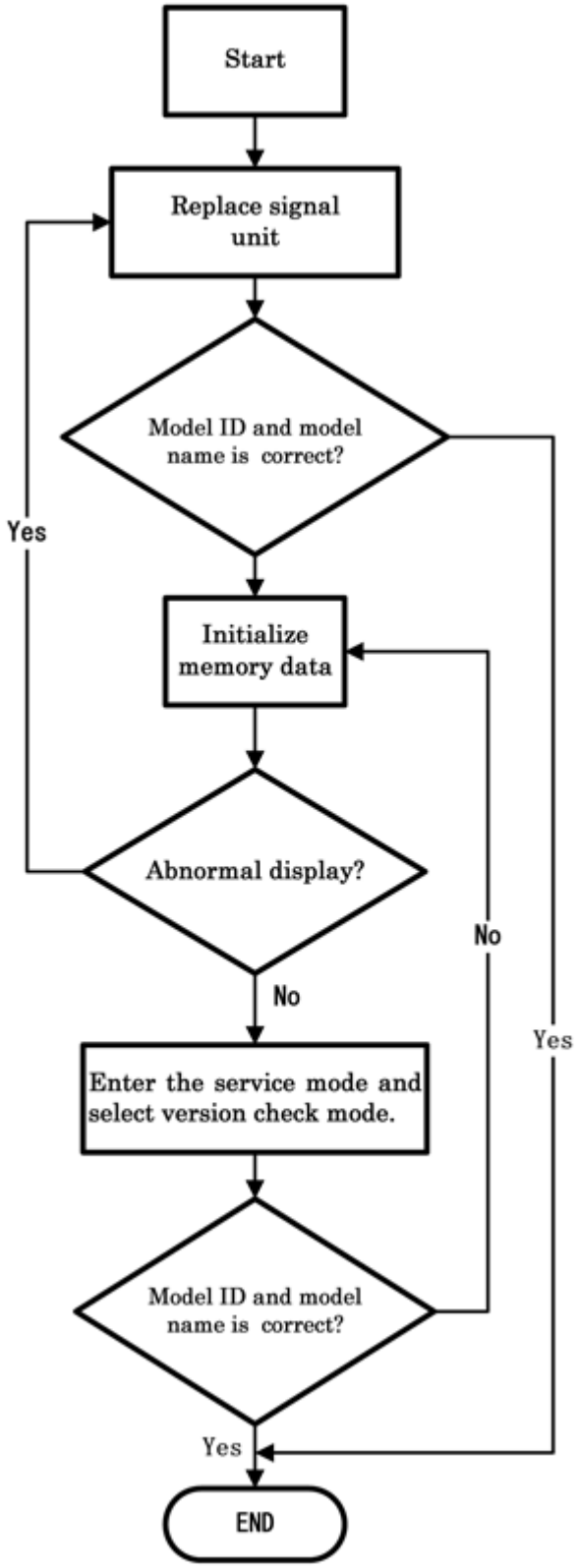
Start
Replace signal unit
Model ID and model name is correct?
Yes
Initialize memory data
Abnormal display?
No
No
Yes
Enter the service mode and select version check mode.
Model ID and model name is correct?
Yes
END

Test Signal Selection

Every pressing of button on the remote control changes the built-in test patterns on screen as described below in Service Mode.

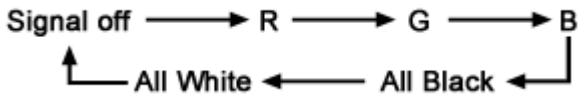

Picture	Signal
	Red raster
	Green raster
	Blue raster
	All Black
	All White

Self Diagnostic Function

1. Press "9" button on remote control during display of adjustment menu in the service mode. The diagnosis will begin to check if interface among IC's is executed properly.

2. During diagnosis, the following displays are shown.

* Self check display and Item are subject to the models.

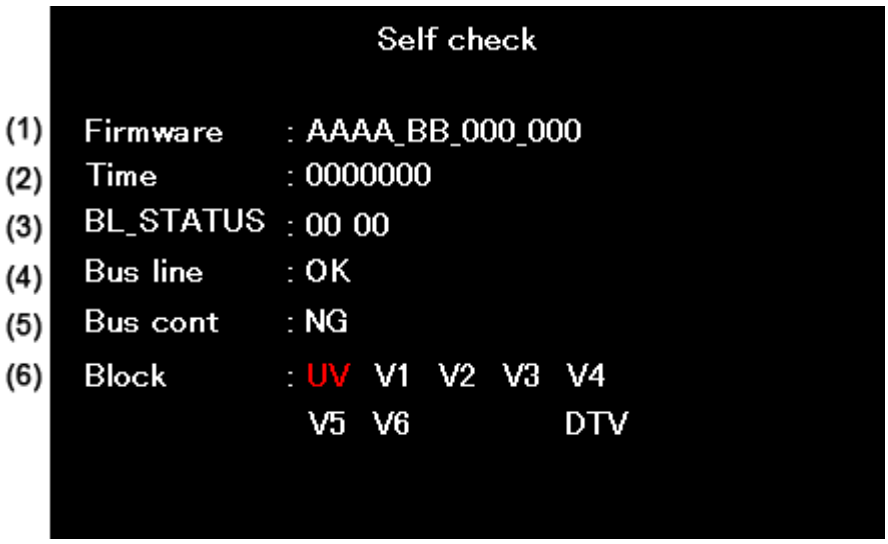

(1) Firmware :
Version information of microprocessor
Series name (AAAA) and market area (BB) and software program version (000_000).

(2) Time : Total hour of turn the TV on. (Unit : H)

(3) BL_STATUS :
Counter for saving BackLight on error1.
This value is counted till 99 (Decimal).

(4) Bus line : -- "OK" is normal
SCL-GND (Red indication) : SCL-GND short circuit
SDA-GND (Red indication) : SDA-GND short circuit
SCL-SDA (Red indication) : SCL-SDA short circuit

(5) Bus cont : --- "OK" is normal.
NG is abnormal (Red indication).
When the abnormal status is detected, type name of semiconductor is indicated in red colour.

(6) Block
UV : TV reception mode

V1 - V6 : VIDEO 1-6 input mode
DTV : DTV mode

UV	ATV
V1	1 (SCART (FULL))
V2	2 (SCART (S+AV))
V3	3 (Component)
V4	4 (Composite)
V5	HDMI1
V6	HDMI2
V7	--
V8	--
V9	--
PC	--
YUV	--
DTV	DTV

Version Check Mode

1. Press "9" button twice on remote control during display of adjustment menu in the service mode.
   The version of main MPU will be checked.

2. During Version Check, the following displays are shown.

* Version check display and Item are subject to the models.

```
                    Version check
(1) MAIN MPU        : AAAA_BB_000_000
(2) EEPROM          : 00

(3) OPTION          : 11 22 33 44 55 66 77 88
(4) HDMI EDID       : OK
(5) BL Ver          : 000.000
(6) AP Ver          : 000.000
(7) A/D Adjust      :        COMP  RGB  NTSC  PAL
                              OK   NG   OK    NG




(8) DRMA0000-REV00
                  MODEL NAME     00-DDD
                    (9)          (10)
```

(1) MAIN MPU :
Version information of microprocessor
Series name and Code Program Version (5 figure number) and software program version (000_000).

(2) EEPROM :
Version information of EEPROM : Display 1 byte data.

(3) OPTION :
Option information : Display eight numbers of 1 byte data.

(4) HDMI EDID :
EDID data check item.
OK : EDID data is enable.
NG : EDID data is disable.

(5) BL Ver
Version information of Boot Loader software as Toshiba release.

(6) AP Ver
Version information of Application software as Toshiba release.

(7) A/D Adjust

A/D adjustment item.

--COMP : Component input

--RGB : RGB Signal (SCART input)

--NTSC : NTSC (60 Hz) SD signal (composite input).

--PAL : PAL (50 Hz) SD signal (composite input).

--OK : A/D adjustment set correctly.

--NG : A/D adjustment set incorrect.

(8) Memory Data Version

Version information of EEPROM.

DRMA**** means model number of EEPROM.

REV** means version of EEPROM.

(9) Model Name

Model name information (ascii code). : Display 8 byte data.

(10) LCD Panel Vendor information display

The following Panel Vendor (DDD) and screen size (00) and displayed.

Example : AUO-32 (1080p) indicates that Vendor is AUO and Screen Size is 32 inch and Full HD panel.

Status Check Mode

1. Press "9" button thrice on remote control during display of adjustment menu in the service mode.
   The status of this model will be checked.

2. During Status Check, the following displays are shown.

* Status check display and Item are subject to the models.

```
                    Status check

(1) MAIN            : ***** ***** *****
(2) MAIN FORMAT     : 1080i-60
(3) MAIN PLL        : 00 11 22 33 44 55 66 77


(4) SCREEN SIZE     : Super Live 1
(5) OTHER STATUS    : 0000 0000 0000
```

(1) MAIN :

Main source information :

Display RF position number (0 - 999) on the main screen, or Input Source (EXT1/2/3/HDMI etc.)

(2) MAIN FORMAT :

Display Video format information

(3) MAIN PLL :

Main PLL information : Display 1 byte data at eight.

(4) SCREEN SIZE :

Display the screen size as follows.

Native
Wide
Super Live 2
Cinema 2
4:3
Super Live 1
Cinema 1
Subtitle
14:9
PC-Normal
PC-Wide

Note:

Exact Scan is shown only when 1080p panel model and video input mode except pc.

(5) OTHER STATUS :

Other status information : Display three numbers of 2 byte data.

LED Indications

The Green and Red LEDs on the TV (at the bottom center of the TV) indicate the TV's status, as described below.

- Red ON (solid) and Green OFF = The TV power cord is plugged in.
- Green ON (solid) only = The TV is operating.
- Green ON (solid) and Red ON = Active standby mode.

SOFTWARE UPGRADE

Software Upgrade

1. Unplug AC Power.
2. Insert USB Flash memory containing software to TV set.
3. Plug AC Power.
4. Progress bar is shown on TV screen while upgrading.
   "100 %" is shown when completed.
   Never power off while upgrading.
5. Unplug AC Power.
6. Remove USB Flash memory.
7. Plug AC Power.

PANEL IDENTIFICATION

Panel Identification

If the several panels are alternatively used in the same model without amending the model name, the identification marking will be shown at the last digit of the set serial number on the specification label on the back cover.

In servicing, do not alter the panel because several setting and parts are different.

Marking	Panel Vendor	Marking	Panel Vendor	Marking	Panel Vendor
A	AUO	J		S	SHARP
B		K	SAMSUNG	T	
C	CMO	L	LGD	U	
D		M		V	
E		N		W	
F		P		X	
G		Q		Y	
H	IPS	R		Z	

With this alternative use, some of key parts may differ and their combinations are indicated with the suffix marking on the location number in the part list (Miscellaneous).

e.g.

Location No.	Part No.	Description
B001A	75007869	LCD Panel, 32" LGD
B001B	75007870	LCD Panel, 32" AUO
MZ01A	75006036	LDVS Cable
MZ01B	75007893	LDVS Cable

PARTS LIST

Precaution

WARNING: BEFORE SERVICING THIS CHASSIS, READ THE "X-RAY RADIATION PRECAUTION" FOR DIRECT VIEW CTV ONLY, "SAFETY PRECAUTION" AND "PRODUCT SAFETY NOTICE" OF THIS MANUAL.

CAUTION: The international hazard symbols "⚠" in the schematic diagram and the parts list designate components which have special characteristics important for safety and should be replaced only with types identical to those in the original circuit or specified in the parts list.

The mounting position of replacements is to be identical with originals. Before replacing any of these components, read carefully the SAFETY PRECAUTION and PRODUCT SAFETY NOTICE.

Do not degrade the safety of the receiver through improper servicing.

Note:

- The part number must be used when ordering parts, in order to assist in processing, be sure to include the Model number and Description.
- The PC board assembly with ∗ mark is no longer available after the end of the production.

Abbreviations

Capacitors	CD	:	Ceramic Disk
Resistors	CF	:	Carbon film
	OMF	:	Oxide Metal Film
	PF	:	Plastic Film

CC : Carbon Composition
VR : Variable Resistor
EL : Electrolytic
MF : Metal Film
FR : Fusible Resistor

All CD and PF capacitors are ±5 %, 50 V and all resistor, ±5 %, 1/6 W unless otherwise noted.

PARTS LIST

Block : All Block

Block		Location	Parts No.	Description
U02A KEY/LED/RMT (PE0491)	*	U02A	75010694	PC BOARD ASSY, PE0491A1, KEY/LED/RMT
U02A KEY/LED/RMT (PE0491)		CB02	75005969	CAPACITOR ELECTROLYTIC 10V 221M, ESRE10
U02A KEY/LED/RMT (PE0491)		CB03	76100104	CAPACITOR, CERAMIC CHIP, 25V F 0.1UF Z
U02A KEY/LED/RMT (PE0491)		CB04	76100104	CAPACITOR, CERAMIC CHIP, 25V F 0.1UF Z
U02A KEY/LED/RMT (PE0491)		CB05	75005969	CAPACITOR ELECTROLYTIC 10V 221M, ESRE10
U02A KEY/LED/RMT (PE0491)		DB01	23358602	DIODE, LED RED-GRN, SPR-54MVWFLMN
U02A KEY/LED/RMT (PE0491)		DB04	23358602	DIODE, LED RED-GRN, SPR-54MVWFLMN
U02A KEY/LED/RMT (PE0491)		DB22	23362251	DIODE, SDS511(SOD-323)
U02A KEY/LED/RMT (PE0491)		DB23	23362251	DIODE, SDS511(SOD-323)
U02A KEY/LED/RMT (PE0491)		GB01	23362042	DIODE, ZENER, UDZS6.8B
U02A KEY/LED/RMT (PE0491)		KB01	75002236	IC, GP1UE261RKVF
U02A KEY/LED/RMT (PE0491)		QB01	23205443	TRANSISTOR, 2SA1162-Y(F)
U02A KEY/LED/RMT (PE0491)		QB02	23205392	TRANSISTOR, 2SC5343UF-Y(BULK)
U02A KEY/LED/RMT (PE0491)		QB03	23205392	TRANSISTOR, 2SC5343UF-Y(BULK)
U02A KEY/LED/RMT (PE0491)		RA71	76011683	RESISTOR, CHIP, 1/20W 68K OHM J
U02A KEY/LED/RMT (PE0491)		RA72	76011223	RESISTOR, CHIP, 1/20W 22K OHM J
U02A KEY/LED/RMT (PE0491)		RA73	76011103	RESISTOR, CHIP, 1/20W 10K OHM J
U02A KEY/LED/RMT (PE0491)		RA74	76000445	CHIP JUMPER, 1608TYPE
U02A KEY/LED/RMT (PE0491)		RA77	76011103	RESISTOR, CHIP, 1/20W 10K OHM J
U02A KEY/LED/RMT (PE0491)		RA78	76000445	CHIP JUMPER, 1608TYPE
U02A KEY/LED/RMT (PE0491)		RA79	76000445	CHIP JUMPER, 1608TYPE
U02A KEY/LED/RMT (PE0491)		RB08	76011470	RESISTOR, CHIP, 1/20W 47 OHM J
U02A KEY/LED/RMT (PE0491)		RB09	76011470	RESISTOR, CHIP, 1/20W 47 OHM J
U02A KEY/LED/RMT (PE0491)		RB10	76011181	RESISTOR, CHIP, 1/20W 180 OHM J
U02A KEY/LED/RMT (PE0491)		RB11	76011271	RESISTOR, CHIP, 1/20W 270 OHM J
U02A KEY/LED/RMT (PE0491)		RB12	76011181	RESISTOR, CHIP, 1/20W 180 OHM J
U02A KEY/LED/RMT (PE0491)		RB13	76011102	RESISTOR, CHIP, 1/20W 1K OHM J
U02A KEY/LED/RMT (PE0491)		RB14	76011102	RESISTOR, CHIP, 1/20W 1K OHM J
U02A KEY/LED/RMT (PE0491)		RB18	76011102	RESISTOR, CHIP, 1/20W 1K OHM J
U02A KEY/LED/RMT (PE0491)		SA01	23344505	SWITCH, PUSH 1C1P
U02A KEY/LED/RMT (PE0491)		SA02	23344505	SWITCH, PUSH 1C1P
U02A KEY/LED/RMT (PE0491)		SA03	23344505	SWITCH, PUSH 1C1P
U02A KEY/LED/RMT (PE0491)		SA04	23344505	SWITCH, PUSH 1C1P
U02A KEY/LED/RMT (PE0491)		SA05	23344505	SWITCH, PUSH 1C1P
U02A KEY/LED/RMT (PE0491)		SA06	23344505	SWITCH, PUSH 1C1P
U02A KEY/LED/RMT (PE0491)		SA07	23344505	SWITCH, PUSH 1C1P
U03AS MAIN (PE0630)	*	U03AS	75012704	PC BOARD ASSY, PE0630A, MAIN
U03AS MAIN (PE0630)		C1001	75008342	CAPACITOR, CERAMIC CHIP(1005), CM05B473K
U03AS MAIN (PE0630)		C1002	75008342	CAPACITOR, CERAMIC CHIP(1005), CM05B473K
U03AS MAIN (PE0630)		C1003	75008342	CAPACITOR, CERAMIC CHIP(1005), CM05B473K
U03AS MAIN (PE0630)		C1004	75008342	CAPACITOR, CERAMIC CHIP(1005), CM05B473K
U03AS MAIN (PE0630)		C1005	75008342	CAPACITOR, CERAMIC CHIP(1005), CM05B473K
U03AS MAIN (PE0630)		C1006	75008342	CAPACITOR, CERAMIC CHIP(1005), CM05B473K
U03AS MAIN (PE0630)		C1007	75009866	CAPACITOR, CERAMIC CHIP (1005), CM05W5R
U03AS MAIN (PE0630)		C1008	75008342	CAPACITOR, CERAMIC CHIP(1005), CM05B473K
U03AS MAIN (PE0630)		C1009	75008342	CAPACITOR, CERAMIC CHIP(1005), CM05B473K

U03AS MAIN (PE0630)		C1010	75008342	CAPACITOR, CERAMIC CHIP(1005), CM05B473K
U03AS MAIN (PE0630)		C1011	75009866	CAPACITOR, CERAMIC CHIP (1005), CM05W5R1
U03AS MAIN (PE0630)		C1012	75009867	CAPACITOR, CERAMIC CHIP (1005), CM05B104
U03AS MAIN (PE0630)		C1013	75009867	CAPACITOR, CERAMIC CHIP (1005), CM05B104
U03AS MAIN (PE0630)		C1014	75009867	CAPACITOR, CERAMIC CHIP (1005), CM05B104
U03AS MAIN (PE0630)		C1015	75012559	CAPACITOR, CERA CHIP, 10V JB 473K 1005 SIZ
U03AS MAIN (PE0630)		C1016	75012559	CAPACITOR, CERA CHIP, 10V JB 473K 1005 SIZ
U03AS MAIN (PE0630)		C1017	75012559	CAPACITOR, CERA CHIP, 10V JB 473K 1005 SIZ
U03AS MAIN (PE0630)		C1018	75012559	CAPACITOR, CERA CHIP, 10V JB 473K 1005 SIZ
U03AS MAIN (PE0630)		C1019	75012559	CAPACITOR, CERA CHIP, 10V JB 473K 1005 SIZ
U03AS MAIN (PE0630)		C1020	75012559	CAPACITOR, CERA CHIP, 10V JB 473K 1005 SIZ
U03AS MAIN (PE0630)		C1021	75012559	CAPACITOR, CERA CHIP, 10V JB 473K 1005 SIZ
U03AS MAIN (PE0630)		C1022	75009867	CAPACITOR, CERAMIC CHIP (1005), CM05B104
U03AS MAIN (PE0630)		C1023	75009881	CAPACITOR, CERAMIC CHIP (2012), C2012JB1A
U03AS MAIN (PE0630)		C1024	75009871	CAPACITOR, CERAMIC CHIP (1005), GRM1552C
U03AS MAIN (PE0630)		C1025	75009836	JUMPER, CHIP 1005TYPE, CR1/16S 000V PB(F)
U03AS MAIN (PE0630)		C1100	75012556	CAPACITOR, CERA CHIP, 50V JB 331K 1005 SIZ
U03AS MAIN (PE0630)		C1101	75012556	CAPACITOR, CERA CHIP, 50V JB 331K 1005 SIZ
U03AS MAIN (PE0630)		C1102	75012556	CAPACITOR, CERA CHIP, 50V JB 331K 1005 SIZ
U03AS MAIN (PE0630)		C1103	75012556	CAPACITOR, CERA CHIP, 50V JB 331K 1005 SIZ
U03AS MAIN (PE0630)		C1104	75012556	CAPACITOR, CERA CHIP, 50V JB 331K 1005 SIZ
U03AS MAIN (PE0630)		C1105	75012556	CAPACITOR, CERA CHIP, 50V JB 331K 1005 SIZ
U03AS MAIN (PE0630)		C1106	75012556	CAPACITOR, CERA CHIP, 50V JB 331K 1005 SIZ
U03AS MAIN (PE0630)		C1107	75012556	CAPACITOR, CERA CHIP, 50V JB 331K 1005 SIZ
U03AS MAIN (PE0630)		C1108	75009932	CAPACITOR, CARAMIC CHIP (1005), CM05W5R5
U03AS MAIN (PE0630)		C1109	75009932	CAPACITOR, CARAMIC CHIP (1005), CM05W5R5
U03AS MAIN (PE0630)		C1110	75009932	CAPACITOR, CARAMIC CHIP (1005), CM05W5R5
U03AS MAIN (PE0630)		C1111	75009932	CAPACITOR, CARAMIC CHIP (1005), CM05W5R5
U03AS MAIN (PE0630)		C1112	75009932	CAPACITOR, CARAMIC CHIP (1005), CM05W5R5
U03AS MAIN (PE0630)		C1113	75009932	CAPACITOR, CARAMIC CHIP (1005), CM05W5R5
U03AS MAIN (PE0630)		C1114	75009932	CAPACITOR, CARAMIC CHIP (1005), CM05W5R5
U03AS MAIN (PE0630)		C1115	75009932	CAPACITOR, CARAMIC CHIP (1005), CM05W5R5
U03AS MAIN (PE0630)		C1116	75005754	CAPACITOR, CERAMIC CHIP, GRM188B31A225K
U03AS MAIN (PE0630)		C1117	75005754	CAPACITOR, CERAMIC CHIP, GRM188B31A225K
U03AS MAIN (PE0630)		C1118	75005754	CAPACITOR, CERAMIC CHIP, GRM188B31A225K
U03AS MAIN (PE0630)		C1119	75005754	CAPACITOR, CERAMIC CHIP, GRM188B31A225K
U03AS MAIN (PE0630)		C1120	75005754	CAPACITOR, CERAMIC CHIP, GRM188B31A225K
U03AS MAIN (PE0630)		C1121	75005754	CAPACITOR, CERAMIC CHIP, GRM188B31A225K
U03AS MAIN (PE0630)		C1122	75005754	CAPACITOR, CERAMIC CHIP, GRM188B31A225K
U03AS MAIN (PE0630)		C1123	75005754	CAPACITOR, CERAMIC CHIP, GRM188B31A225K
U03AS MAIN (PE0630)		C1124	75009875	CAPACITOR, CERAMIC CHIP (1608), GRM188B3
U03AS MAIN (PE0630)		C1125	75012562	CAPACITOR, CERAMIC CHIP(1005), EMK105BJ1
U03AS MAIN (PE0630)		C1126	75012562	CAPACITOR, CERAMIC CHIP(1005), EMK105BJ1
U03AS MAIN (PE0630)		C1127	75005814	CAPACITOR, CERAMIC CHIP, 2012 GRM21BB31
U03AS MAIN (PE0630)		C1128	75009869	CAPACITOR, CERAMIC CHIP (1005), CM05X5R1
U03AS MAIN (PE0630)		C1130	75006008	CAPACITOR, CERAMIC CHIP (2012), GRM21BB3
U03AS MAIN (PE0630)		C1131	75009875	CAPACITOR, CERAMIC CHIP (1608), GRM188B3

U03AS MAIN (PE0630)		C1134	75012562	CAPACITOR, CERAMIC CHIP(1005), EMK105BJ1
U03AS MAIN (PE0630)		C1135	75012562	CAPACITOR, CERAMIC CHIP(1005), EMK105BJ1
U03AS MAIN (PE0630)		C1136	75012562	CAPACITOR, CERAMIC CHIP(1005), EMK105BJ1
U03AS MAIN (PE0630)		C1137	75012562	CAPACITOR, CERAMIC CHIP(1005), EMK105BJ1
U03AS MAIN (PE0630)		C1216	75009867	CAPACITOR, CERAMIC CHIP (1005), CM05B104
U03AS MAIN (PE0630)		C1301	75009869	CAPACITOR, CERAMIC CHIP (1005), CM05X5R1
U03AS MAIN (PE0630)		C1302	75012554	CAPACITOR, CERA CHIP, 50V CH 220J 1005 SI
U03AS MAIN (PE0630)		C1303	75012453	CAPACITOR, CERAMIC CHIP, 50V CH 150J, C1
U03AS MAIN (PE0630)		C1310	75007603	CAPACITOR, CERAMIC CHIP(1005), CM05CH10
U03AS MAIN (PE0630)		C1401	75009867	CAPACITOR, CERAMIC CHIP (1005), CM05B104
U03AS MAIN (PE0630)		C1402	75009867	CAPACITOR, CERAMIC CHIP (1005), CM05B104
U03AS MAIN (PE0630)		C1403	75009867	CAPACITOR, CERAMIC CHIP (1005), CM05B104
U03AS MAIN (PE0630)		C1404	75009867	CAPACITOR, CERAMIC CHIP (1005), CM05B104
U03AS MAIN (PE0630)		C1405	75009867	CAPACITOR, CERAMIC CHIP (1005), CM05B104
U03AS MAIN (PE0630)		C1406	75009867	CAPACITOR, CERAMIC CHIP (1005), CM05B104
U03AS MAIN (PE0630)		C1407	75009867	CAPACITOR, CERAMIC CHIP (1005), CM05B104
U03AS MAIN (PE0630)		C1408	75009867	CAPACITOR, CERAMIC CHIP (1005), CM05B104
U03AS MAIN (PE0630)		C1409	75009867	CAPACITOR, CERAMIC CHIP (1005), CM05B104
U03AS MAIN (PE0630)		C1410	75009867	CAPACITOR, CERAMIC CHIP (1005), CM05B104
U03AS MAIN (PE0630)		C1411	75009867	CAPACITOR, CERAMIC CHIP (1005), CM05B104
U03AS MAIN (PE0630)		C1412	75009867	CAPACITOR, CERAMIC CHIP (1005), CM05B104
U03AS MAIN (PE0630)		C1413	75009867	CAPACITOR, CERAMIC CHIP (1005), CM05B104
U03AS MAIN (PE0630)		C1414	75009867	CAPACITOR, CERAMIC CHIP (1005), CM05B104
U03AS MAIN (PE0630)		C1415	75009867	CAPACITOR, CERAMIC CHIP (1005), CM05B104
U03AS MAIN (PE0630)		C1416	75009867	CAPACITOR, CERAMIC CHIP (1005), CM05B104
U03AS MAIN (PE0630)		C1417	75009867	CAPACITOR, CERAMIC CHIP (1005), CM05B104
U03AS MAIN (PE0630)		C1418	75009867	CAPACITOR, CERAMIC CHIP (1005), CM05B104
U03AS MAIN (PE0630)		C1419	75009867	CAPACITOR, CERAMIC CHIP (1005), CM05B104
U03AS MAIN (PE0630)		C1420	75009867	CAPACITOR, CERAMIC CHIP (1005), CM05B104
U03AS MAIN (PE0630)		C1421	75009867	CAPACITOR, CERAMIC CHIP (1005), CM05B104
U03AS MAIN (PE0630)		C1422	75009867	CAPACITOR, CERAMIC CHIP (1005), CM05B104
U03AS MAIN (PE0630)		C1423	75009867	CAPACITOR, CERAMIC CHIP (1005), CM05B104
U03AS MAIN (PE0630)		C1424	75009867	CAPACITOR, CERAMIC CHIP (1005), CM05B104
U03AS MAIN (PE0630)		C1425	75009867	CAPACITOR, CERAMIC CHIP (1005), CM05B104
U03AS MAIN (PE0630)		C1426	75009867	CAPACITOR, CERAMIC CHIP (1005), CM05B104
U03AS MAIN (PE0630)		C1502	75009867	CAPACITOR, CERAMIC CHIP (1005), CM05B104
U03AS MAIN (PE0630)		C1504	75009867	CAPACITOR, CERAMIC CHIP (1005), CM05B104
U03AS MAIN (PE0630)		C1505	75009867	CAPACITOR, CERAMIC CHIP (1005), CM05B104
U03AS MAIN (PE0630)		C1509	75009867	CAPACITOR, CERAMIC CHIP (1005), CM05B104
U03AS MAIN (PE0630)		C1510	75012561	CAPACITOR, CERA CHIP, 16V JB 104K 1005 SI
U03AS MAIN (PE0630)		C1511	75009867	CAPACITOR, CERAMIC CHIP (1005), CM05B104
U03AS MAIN (PE0630)		C1518	75009867	CAPACITOR, CERAMIC CHIP (1005), CM05B104
U03AS MAIN (PE0630)		C1601	75009867	CAPACITOR, CERAMIC CHIP (1005), CM05B104
U03AS MAIN (PE0630)		C1602	75009867	CAPACITOR, CERAMIC CHIP (1005), CM05B104
U03AS MAIN (PE0630)		C1603	75009867	CAPACITOR, CERAMIC CHIP (1005), CM05B104
U03AS MAIN (PE0630)		C1604	75009867	CAPACITOR, CERAMIC CHIP (1005), CM05B104
U03AS MAIN (PE0630)		C1605	75009867	CAPACITOR, CERAMIC CHIP (1005), CM05B104

U03AS MAIN (PE0630)		C1606	75009867	CAPACITOR, CERAMIC CHIP (1005), CM05B104
U03AS MAIN (PE0630)		C1607	75009867	CAPACITOR, CERAMIC CHIP (1005), CM05B104
U03AS MAIN (PE0630)		C1608	75009867	CAPACITOR, CERAMIC CHIP (1005), CM05B104
U03AS MAIN (PE0630)		C1609	75009867	CAPACITOR, CERAMIC CHIP (1005), CM05B104
U03AS MAIN (PE0630)		C1610	75009867	CAPACITOR, CERAMIC CHIP (1005), CM05B104
U03AS MAIN (PE0630)		C1701	75009867	CAPACITOR, CERAMIC CHIP (1005), CM05B104
U03AS MAIN (PE0630)		C1702	75009867	CAPACITOR, CERAMIC CHIP (1005), CM05B104
U03AS MAIN (PE0630)		C1703	75009867	CAPACITOR, CERAMIC CHIP (1005), CM05B104
U03AS MAIN (PE0630)		C2000	75009875	CAPACITOR, CERAMIC CHIP (1608), GRM188B3
U03AS MAIN (PE0630)		C2001	75005754	CAPACITOR, CERAMIC CHIP, GRM188B31A225K
U03AS MAIN (PE0630)		C2105	75005814	CAPACITOR, CERAMIC CHIP, 2012 GRM21BB31
U03AS MAIN (PE0630)		C2106	75005814	CAPACITOR, CERAMIC CHIP, 2012 GRM21BB31
U03AS MAIN (PE0630)		C2107	75007611	CAPACITOR, CERAMIC CHIP(1005), GRM155B1
U03AS MAIN (PE0630)		C2108	75007611	CAPACITOR, CERAMIC CHIP(1005), GRM155B1
U03AS MAIN (PE0630)		C2109	75009872	CAPACITOR, ELECTROLYTIC CHIP, EEEHB1C10
U03AS MAIN (PE0630)		C2203	75005814	CAPACITOR, CERAMIC CHIP, 2012 GRM21BB31
U03AS MAIN (PE0630)		C2204	75005814	CAPACITOR, CERAMIC CHIP, 2012 GRM21BB31
U03AS MAIN (PE0630)		C2205	75007611	CAPACITOR, CERAMIC CHIP(1005), GRM155B1
U03AS MAIN (PE0630)		C2206	75007611	CAPACITOR, CERAMIC CHIP(1005), GRM155B1
U03AS MAIN (PE0630)		C2207	75009872	CAPACITOR, ELECTROLYTIC CHIP, EEEHB1C10
U03AS MAIN (PE0630)		C2208	75009872	CAPACITOR, ELECTROLYTIC CHIP, EEEHB1C10
U03AS MAIN (PE0630)		C2401	75007605	CAPACITOR, CERAMIC CHIP(1005), CM05W5R2
U03AS MAIN (PE0630)		C2402	75007605	CAPACITOR, CERAMIC CHIP(1005), CM05W5R2
U03AS MAIN (PE0630)		C2403	75009866	CAPACITOR, CERAMIC CHIP (1005), CM05W5R
U03AS MAIN (PE0630)		C2404	75009866	CAPACITOR, CERAMIC CHIP (1005), CM05W5R
U03AS MAIN (PE0630)		C2405	75009866	CAPACITOR, CERAMIC CHIP (1005), CM05W5R
U03AS MAIN (PE0630)		C2406	75009866	CAPACITOR, CERAMIC CHIP (1005), CM05W5R
U03AS MAIN (PE0630)		C2701	75009869	CAPACITOR, CERAMIC CHIP (1005), CM05X5R1
U03AS MAIN (PE0630)		C2702	75009869	CAPACITOR, CERAMIC CHIP (1005), CM05X5R1
U03AS MAIN (PE0630)		C2704	75006011	CAPACITOR, ELECTROLYTIC CHIP, EEEHB1A10
U03AS MAIN (PE0630)		C2705	75007607	CAPACITOR, ELECTROLYTIC CHIP, 16SGV470M
U03AS MAIN (PE0630)		C2711	75009869	CAPACITOR, CERAMIC CHIP (1005), CM05X5R1
U03AS MAIN (PE0630)		C2712	75009869	CAPACITOR, CERAMIC CHIP (1005), CM05X5R1
U03AS MAIN (PE0630)		C2715	75007607	CAPACITOR, ELECTROLYTIC CHIP, 16SGV470M
U03AS MAIN (PE0630)		C2805	75009867	CAPACITOR, CERAMIC CHIP (1005), CM05B104
U03AS MAIN (PE0630)		C2806	75009869	CAPACITOR, CERAMIC CHIP (1005), CM05X5R1
U03AS MAIN (PE0630)		C2807	75002272	CAPACITOR, CERAMIC CHIP, 25V CH 220PF J,
U03AS MAIN (PE0630)		C2808	75007604	CAPACITOR, CERAMIC CHI(1005), CM05W5R15
U03AS MAIN (PE0630)		C2809	75007605	CAPACITOR, CERAMIC CHIP(1005), CM05W5R2
U03AS MAIN (PE0630)		C2810	75009867	CAPACITOR, CERAMIC CHIP (1005), CM05B104
U03AS MAIN (PE0630)		C2900	75005754	CAPACITOR, CERAMIC CHIP, GRM188B31A225K
U03AS MAIN (PE0630)		C2901	75005754	CAPACITOR, CERAMIC CHIP, GRM188B31A225K
U03AS MAIN (PE0630)		C2905	75005754	CAPACITOR, CERAMIC CHIP, GRM188B31A225K
U03AS MAIN (PE0630)		C3000	75009867	CAPACITOR, CERAMIC CHIP (1005), CM05B104
U03AS MAIN (PE0630)		C3001	75009867	CAPACITOR, CERAMIC CHIP (1005), CM05B104
U03AS MAIN (PE0630)		C3004	75009856	CAPACITOR, CERAMIC CHIP (1608), CM105W5F
U03AS MAIN (PE0630)		C3005	75009856	CAPACITOR, CERAMIC CHIP (1608), CM105W5F

U03AS MAIN (PE0630)		C3006	75009856	CAPACITOR, CERAMIC CHIP (1608), CM105W5F
U03AS MAIN (PE0630)		C3007	75009867	CAPACITOR, CERAMIC CHIP (1005), CM05B104
U03AS MAIN (PE0630)		C3008	75009877	CAPACITOR, CERAMIC CHIP (1005), GRM155B1
U03AS MAIN (PE0630)		C3009	75009867	CAPACITOR, CERAMIC CHIP (1005), CM05B104
U03AS MAIN (PE0630)		C3010	75009877	CAPACITOR, CERAMIC CHIP (1005), GRM155B1
U03AS MAIN (PE0630)		C3011	75009867	CAPACITOR, CERAMIC CHIP (1005), CM05B104
U03AS MAIN (PE0630)		C3013	75009877	CAPACITOR, CERAMIC CHIP (1005), GRM155B1
U03AS MAIN (PE0630)		C3014	75009867	CAPACITOR, CERAMIC CHIP (1005), CM05B104
U03AS MAIN (PE0630)		C3015	75009877	CAPACITOR, CERAMIC CHIP (1005), GRM155B1
U03AS MAIN (PE0630)		C3016	75009867	CAPACITOR, CERAMIC CHIP (1005), CM05B104
U03AS MAIN (PE0630)		C3017	75009877	CAPACITOR, CERAMIC CHIP (1005), GRM155B1
U03AS MAIN (PE0630)		C3018	75009867	CAPACITOR, CERAMIC CHIP (1005), CM05B104
U03AS MAIN (PE0630)		C3019	75009877	CAPACITOR, CERAMIC CHIP (1005), GRM155B1
U03AS MAIN (PE0630)		C3020	75012555	CAPACITOR, CERA CHIP, 50V CH 470J 1005 SIZ
U03AS MAIN (PE0630)		C3021	75012555	CAPACITOR, CERA CHIP, 50V CH 470J 1005 SIZ
U03AS MAIN (PE0630)		C3022	75009867	CAPACITOR, CERAMIC CHIP (1005), CM05B104
U03AS MAIN (PE0630)		C3501	75009867	CAPACITOR, CERAMIC CHIP (1005), CM05B104
U03AS MAIN (PE0630)		C3502	75009867	CAPACITOR, CERAMIC CHIP (1005), CM05B104
U03AS MAIN (PE0630)		C3503	75009861	CAPACITOR, CERAMIC CHIP (1608), CM105B10
U03AS MAIN (PE0630)		C5201	75007603	CAPACITOR, CERAMIC CHIP(1005), CM05CH10
U03AS MAIN (PE0630)		C5202	75009867	CAPACITOR, CERAMIC CHIP (1005), CM05B104
U03AS MAIN (PE0630)		C5203	75007603	CAPACITOR, CERAMIC CHIP(1005), CM05CH10
U03AS MAIN (PE0630)		C5204	75007603	CAPACITOR, CERAMIC CHIP(1005), CM05CH10
U03AS MAIN (PE0630)		C5205	75007603	CAPACITOR, CERAMIC CHIP(1005), CM05CH10
U03AS MAIN (PE0630)		C6000	75009862	CAPACITOR, CERAMIC CHIP (3216), GRM31CB1
U03AS MAIN (PE0630)		C6001	75009862	CAPACITOR, CERAMIC CHIP (3216), GRM31CB1
U03AS MAIN (PE0630)		C6002	75007603	CAPACITOR, CERAMIC CHIP(1005), CM05CH10
U03AS MAIN (PE0630)		C6003	75007603	CAPACITOR, CERAMIC CHIP(1005), CM05CH10
U03AS MAIN (PE0630)		C6004	75007609	CAPACITOR, ELECTROLYTIC CHIP, EEEFK1E47
U03AS MAIN (PE0630)		C6005	75006008	CAPACITOR, CERAMIC CHIP (2012), GRM21BB3
U03AS MAIN (PE0630)		C6029	75009862	CAPACITOR, CERAMIC CHIP (3216), GRM31CB1
U03AS MAIN (PE0630)		C6030	75009862	CAPACITOR, CERAMIC CHIP (3216), GRM31CB1
U03AS MAIN (PE0630)		C6060	75007603	CAPACITOR, CERAMIC CHIP(1005), CM05CH10
U03AS MAIN (PE0630)		C6063	75007603	CAPACITOR, CERAMIC CHIP(1005), CM05CH10
U03AS MAIN (PE0630)		C6066	75007609	CAPACITOR, ELECTROLYTIC CHIP, EEEFK1E47
U03AS MAIN (PE0630)		C6101	75005755	CAPACITOR, CERAMIC CHIP, GRM1552C1H390
U03AS MAIN (PE0630)		C6102	75006010	CAPACITOR, CERAMIC CHIP (1608), GRM188B3
U03AS MAIN (PE0630)		C6103	75009927	CAPACITOR, CERAMIC CHIP (1608), CM105B10
U03AS MAIN (PE0630)		C6104	75009927	CAPACITOR, CERAMIC CHIP (1608), CM105B10
U03AS MAIN (PE0630)		C6105	75009927	CAPACITOR, CERAMIC CHIP (1608), CM105B10
U03AS MAIN (PE0630)		C6106	75005709	CAPACITOR, CHIP CERA, 50V B 0.47UF K, GRM
U03AS MAIN (PE0630)		C6107	75009853	CAPACITOR, CERAMIC CHIP (1608), CM105W5F
U03AS MAIN (PE0630)		C6108	75009853	CAPACITOR, CERAMIC CHIP (1608), CM105W5F
U03AS MAIN (PE0630)		C6109	75009853	CAPACITOR, CERAMIC CHIP (1608), CM105W5F
U03AS MAIN (PE0630)		C6110	75005755	CAPACITOR, CERAMIC CHIP, GRM1552C1H390
U03AS MAIN (PE0630)		C6111	75009927	CAPACITOR, CERAMIC CHIP (1608), CM105B10
U03AS MAIN (PE0630)		C6112	75009927	CAPACITOR, CERAMIC CHIP (1608), CM105B10

U03AS MAIN (PE0630)		C6113	75009927	CAPACITOR, CERAMIC CHIP (1608), CM105B10
U03AS MAIN (PE0630)		C6114	75009927	CAPACITOR, CERAMIC CHIP (1608), CM105B10
U03AS MAIN (PE0630)		C6115	75005709	CAPACITOR, CHIP CERA, 50V B 0.47UF K, GRM
U03AS MAIN (PE0630)		C6116	75009853	CAPACITOR, CERAMIC CHIP (1608), CM105W5F
U03AS MAIN (PE0630)		C6117	75009853	CAPACITOR, CERAMIC CHIP (1608), CM105W5F
U03AS MAIN (PE0630)		C6118	75009853	CAPACITOR, CERAMIC CHIP (1608), CM105W5F
U03AS MAIN (PE0630)		C6119	75006010	CAPACITOR, CERAMIC CHIP (1608), GRM188B3
U03AS MAIN (PE0630)		C6120	75009927	CAPACITOR, CERAMIC CHIP (1608), CM105B10
U03AS MAIN (PE0630)		C6121	75009927	CAPACITOR, CERAMIC CHIP (1608), CM105B10
U03AS MAIN (PE0630)		C6122	75010772	CAPACITOR, CERAMIC CHIP (2012), CM21B106
U03AS MAIN (PE0630)		C6124	75008346	CAPACITOR, CERAMIC CHIP(1005), GRM155B31
U03AS MAIN (PE0630)		C6125	75008340	CAPACITOR, CERAMIC CHIP(1005), CM05W5R1
U03AS MAIN (PE0630)		C6126	76073057	CAPACITOR, ELECTROLYTIC, 25V 1000UF M
U03AS MAIN (PE0630)		C6127	75010144	CAPACITOR, CERAMIC CHIP (1608), CM105CH4
U03AS MAIN (PE0630)		C6128	75009868	CAPACITOR, CERAMIC CHIP (1608), CM105X5R
U03AS MAIN (PE0630)		C6129	75009867	CAPACITOR, CERAMIC CHIP (1005), CM05B104
U03AS MAIN (PE0630)		C6130	75009927	CAPACITOR, CERAMIC CHIP (1608), CM105B10
U03AS MAIN (PE0630)		C6131	75002273	CAPACITOR, CERAMIC CHIP, 50V R 680PF K, C
U03AS MAIN (PE0630)		C6132	75010714	CAPACITOR, CERAMIC CHIP (1005), GRM155B1
U03AS MAIN (PE0630)		C6133	75009877	CAPACITOR, CERAMIC CHIP (1005), GRM155B1
U03AS MAIN (PE0630)		C6134	75009878	CAPACITOR, CERAMIC CHIP (1608), GRM188B1
U03AS MAIN (PE0630)		C6136	75006008	CAPACITOR, CERAMIC CHIP (2012), GRM21BB3
U03AS MAIN (PE0630)		C6137	75009927	CAPACITOR, CERAMIC CHIP (1608), CM105B10
U03AS MAIN (PE0630)		C6138	75010144	CAPACITOR, CERAMIC CHIP (1608), CM105CH4
U03AS MAIN (PE0630)		C6139	75006010	CAPACITOR, CERAMIC CHIP (1608), GRM188B3
U03AS MAIN (PE0630)		C6140	75006010	CAPACITOR, CERAMIC CHIP (1608), GRM188B3
U03AS MAIN (PE0630)		C6301	75010499	CAPACITOR, ELECTROLYTIC CHIP, 16V 471M 3
U03AS MAIN (PE0630)		C6303	75007612	CAPACITOR, ELECTROLYTIC CHIP, MVJ50VC1M
U03AS MAIN (PE0630)		C6401	75006008	CAPACITOR, CERAMIC CHIP (2012), GRM21BB3
U03AS MAIN (PE0630)		C6402	75006008	CAPACITOR, CERAMIC CHIP (2012), GRM21BB3
U03AS MAIN (PE0630)		C6403	75007605	CAPACITOR, CERAMIC CHIP(1005), CM05W5R2
U03AS MAIN (PE0630)		C6404	75007605	CAPACITOR, CERAMIC CHIP(1005), CM05W5R2
U03AS MAIN (PE0630)		C6405	75010709	CAPACITOR, CERAMIC CHIP (2012), CM21X5R1
U03AS MAIN (PE0630)		C6406	75010709	CAPACITOR, CERAMIC CHIP (2012), CM21X5R1
U03AS MAIN (PE0630)		C6407	75010771	CAPACITOR, ELECTROLYTIC CHIP, MVJ16VC47
U03AS MAIN (PE0630)		C6408	75010771	CAPACITOR, ELECTROLYTIC CHIP, MVJ16VC47
U03AS MAIN (PE0630)		C6409	75010771	CAPACITOR, ELECTROLYTIC CHIP, MVJ16VC47
U03AS MAIN (PE0630)		C6410	75010771	CAPACITOR, ELECTROLYTIC CHIP, MVJ16VC47
U03AS MAIN (PE0630)		C6411	75009872	CAPACITOR, ELECTROLYTIC CHIP, EEEHB1C10
U03AS MAIN (PE0630)		C6412	75009853	CAPACITOR, CERAMIC CHIP (1608), CM105W5F
U03AS MAIN (PE0630)		C6413	75010771	CAPACITOR, ELECTROLYTIC CHIP, MVJ16VC47
U03AS MAIN (PE0630)		C6415	75005754	CAPACITOR, CERAMIC CHIP, GRM188B31A225K
U03AS MAIN (PE0630)		C6416	75012085	CAPACITOR, CERAMIC CHIP(1608), CM105CH10
U03AS MAIN (PE0630)		C7001	75009864	CAPACITOR, CERAMIC CHIP (1005), CM05Y5V1
U03AS MAIN (PE0630)		C7002	75009864	CAPACITOR, CERAMIC CHIP (1005), CM05Y5V1
U03AS MAIN (PE0630)		C7003	75009864	CAPACITOR, CERAMIC CHIP (1005), CM05Y5V1
U03AS MAIN (PE0630)		C7004	75009864	CAPACITOR, CERAMIC CHIP (1005), CM05Y5V1

U03AS MAIN (PE0630)		C7005	75009864	CAPACITOR, CERAMIC CHIP (1005), CM05Y5V1
U03AS MAIN (PE0630)		C7007	75009864	CAPACITOR, CERAMIC CHIP (1005), CM05Y5V1
U03AS MAIN (PE0630)		C7008	75009864	CAPACITOR, CERAMIC CHIP (1005), CM05Y5V1
U03AS MAIN (PE0630)		C7009	75009864	CAPACITOR, CERAMIC CHIP (1005), CM05Y5V1
U03AS MAIN (PE0630)		C7010	75009864	CAPACITOR, CERAMIC CHIP (1005), CM05Y5V1
U03AS MAIN (PE0630)		C7011	75009864	CAPACITOR, CERAMIC CHIP (1005), CM05Y5V1
U03AS MAIN (PE0630)		C7012	75009864	CAPACITOR, CERAMIC CHIP (1005), CM05Y5V1
U03AS MAIN (PE0630)		C7013	75009867	CAPACITOR, CERAMIC CHIP (1005), CM05B104
U03AS MAIN (PE0630)		C7014	75009867	CAPACITOR, CERAMIC CHIP (1005), CM05B104
U03AS MAIN (PE0630)		C7015	75009864	CAPACITOR, CERAMIC CHIP (1005), CM05Y5V1
U03AS MAIN (PE0630)		C7018	75009877	CAPACITOR, CERAMIC CHIP (1005), GRM155B1
U03AS MAIN (PE0630)		C7019	75009925	CAPACITOR, CERAMIC CHIP (1608), CM105Y5V
U03AS MAIN (PE0630)		C7020	75009925	CAPACITOR, CERAMIC CHIP (1608), CM105Y5V
U03AS MAIN (PE0630)		C7021	75008673	CAPACITOR, CERAMIC CHIP(2012), CM21B474K
U03AS MAIN (PE0630)		C7022	75009925	CAPACITOR, CERAMIC CHIP (1608), CM105Y5V
U03AS MAIN (PE0630)		C7024	75009864	CAPACITOR, CERAMIC CHIP (1005), CM05Y5V1
U03AS MAIN (PE0630)		C7027	75009925	CAPACITOR, CERAMIC CHIP (1608), CM105Y5V
U03AS MAIN (PE0630)		C7028	75009867	CAPACITOR, CERAMIC CHIP (1005), CM05B104
U03AS MAIN (PE0630)		C7081	75009867	CAPACITOR, CERAMIC CHIP (1005), CM05B104
U03AS MAIN (PE0630)		C8000	75009867	CAPACITOR, CERAMIC CHIP (1005), CM05B104
U03AS MAIN (PE0630)		C8001	75009867	CAPACITOR, CERAMIC CHIP (1005), CM05B104
U03AS MAIN (PE0630)		C8002	75010711	CAPACITOR, CERAMIC CHIP (1005), CM05W5R2
U03AS MAIN (PE0630)		C8003	75009867	CAPACITOR, CERAMIC CHIP (1005), CM05B104
U03AS MAIN (PE0630)		C8004	75009867	CAPACITOR, CERAMIC CHIP (1005), CM05B104
U03AS MAIN (PE0630)		C8005	75010711	CAPACITOR, CERAMIC CHIP (1005), CM05W5R2
U03AS MAIN (PE0630)		C8006	75009867	CAPACITOR, CERAMIC CHIP (1005), CM05B104
U03AS MAIN (PE0630)		C8008	75009869	CAPACITOR, CERAMIC CHIP (1005), CM05X5R1
U03AS MAIN (PE0630)		C8009	75009869	CAPACITOR, CERAMIC CHIP (1005), CM05X5R1
U03AS MAIN (PE0630)		C8010	75009869	CAPACITOR, CERAMIC CHIP (1005), CM05X5R1
U03AS MAIN (PE0630)		C8011	75009867	CAPACITOR, CERAMIC CHIP (1005), CM05B104
U03AS MAIN (PE0630)		C8013	75009869	CAPACITOR, CERAMIC CHIP (1005), CM05X5R1
U03AS MAIN (PE0630)		C8014	75009869	CAPACITOR, CERAMIC CHIP (1005), CM05X5R1
U03AS MAIN (PE0630)		C8015	75009866	CAPACITOR, CERAMIC CHIP (1005), CM05W5R1
U03AS MAIN (PE0630)		C8016	75009866	CAPACITOR, CERAMIC CHIP (1005), CM05W5R1
U03AS MAIN (PE0630)		C8017	75009869	CAPACITOR, CERAMIC CHIP (1005), CM05X5R1
U03AS MAIN (PE0630)		C8018	75009869	CAPACITOR, CERAMIC CHIP (1005), CM05X5R1
U03AS MAIN (PE0630)		C8019	75009869	CAPACITOR, CERAMIC CHIP (1005), CM05X5R1
U03AS MAIN (PE0630)		C8020	75009869	CAPACITOR, CERAMIC CHIP (1005), CM05X5R1
U03AS MAIN (PE0630)		C8023	75009869	CAPACITOR, CERAMIC CHIP (1005), CM05X5R1
U03AS MAIN (PE0630)		C8024	75010501	CAPACITOR, CERAMIC CHIP (1005), UMK105CH
U03AS MAIN (PE0630)		C8025	75010501	CAPACITOR, CERAMIC CHIP (1005), UMK105CH
U03AS MAIN (PE0630)		C8026	75009869	CAPACITOR, CERAMIC CHIP (1005), CM05X5R1
U03AS MAIN (PE0630)		C8027	75009869	CAPACITOR, CERAMIC CHIP (1005), CM05X5R1
U03AS MAIN (PE0630)		C8028	75009869	CAPACITOR, CERAMIC CHIP (1005), CM05X5R1
U03AS MAIN (PE0630)		C8501	75009869	CAPACITOR, CERAMIC CHIP (1005), CM05X5R1
U03AS MAIN (PE0630)		C8502	75009866	CAPACITOR, CERAMIC CHIP (1005), CM05W5R1
U03AS MAIN (PE0630)		C8506	75009879	CAPACITOR, CERAMIC CHIP (1005), GRM1552C

U03AS MAIN (PE0630)		C8507	75009879	CAPACITOR, CERAMIC CHIP (1005), GRM1552C
U03AS MAIN (PE0630)		C8508	75009869	CAPACITOR, CERAMIC CHIP (1005), CM05X5R1
U03AS MAIN (PE0630)		C8510	75006003	CAPACITOR, EMVE100ADA471MHA0G
U03AS MAIN (PE0630)		C8512	75007608	CAPACITOR, ELECTROLYTIC CHIP, MVJ50VC10
U03AS MAIN (PE0630)		C8514	75012560	CAPACITOR, CERA CHIP, 10V JB 104K 1005 SIZ
U03AS MAIN (PE0630)		C8515	75012560	CAPACITOR, CERA CHIP, 10V JB 104K 1005 SIZ
U03AS MAIN (PE0630)		C8517	75009863	CAPACITOR, CERAMIC CHIP (1005), CM05W5R
U03AS MAIN (PE0630)		C8518	75009863	CAPACITOR, CERAMIC CHIP (1005), CM05W5R
U03AS MAIN (PE0630)		C8520	75007603	CAPACITOR, CERAMIC CHIP(1005), CM05CH10
U03AS MAIN (PE0630)		C8521	75007603	CAPACITOR, CERAMIC CHIP(1005), CM05CH10
U03AS MAIN (PE0630)		C9003	75009856	CAPACITOR, CERAMIC CHIP (1608), CM105W5F
U03AS MAIN (PE0630)		C9004	75009859	CAPACITOR, CERAMIC CHIP (1608), CM105CH1
U03AS MAIN (PE0630)		C9005	75009856	CAPACITOR, CERAMIC CHIP (1608), CM105W5F
U03AS MAIN (PE0630)		C9202	75009867	CAPACITOR, CERAMIC CHIP (1005), CM05B104
U03AS MAIN (PE0630)		C9205	75009868	CAPACITOR, CERAMIC CHIP (1608), CM105X5R
U03AS MAIN (PE0630)		C9207	75009239	CAPACITOR, CERAMIC CHIP(1608), CM105W5R
U03AS MAIN (PE0630)		C9208	75009239	CAPACITOR, CERAMIC CHIP(1608), CM105W5R
U03AS MAIN (PE0630)		C9211	75009239	CAPACITOR, CERAMIC CHIP(1608), CM105W5R
U03AS MAIN (PE0630)		C9216	75009239	CAPACITOR, CERAMIC CHIP(1608), CM105W5R
U03AS MAIN (PE0630)		C9224	75009239	CAPACITOR, CERAMIC CHIP(1608), CM105W5R
U03AS MAIN (PE0630)		C9501	75009867	CAPACITOR, CERAMIC CHIP (1005), CM05B104
U03AS MAIN (PE0630)		C9503	75009878	CAPACITOR, CERAMIC CHIP (1608), GRM188B1
U03AS MAIN (PE0630)		C9504	75009881	CAPACITOR, CERAMIC CHIP (2012), C2012JB1A
U03AS MAIN (PE0630)		C9506	75009878	CAPACITOR, CERAMIC CHIP (1608), GRM188B1
U03AS MAIN (PE0630)		C9507	75009867	CAPACITOR, CERAMIC CHIP (1005), CM05B104
U03AS MAIN (PE0630)		C9508	75009881	CAPACITOR, CERAMIC CHIP (2012), C2012JB1A
U03AS MAIN (PE0630)		C9511	75007603	CAPACITOR, CERAMIC CHIP(1005), CM05CH10
U03AS MAIN (PE0630)		C9513	75009881	CAPACITOR, CERAMIC CHIP (2012), C2012JB1A
U03AS MAIN (PE0630)		C9514	75006005	CAPACITOR, CERAMIC CHIP (1005), CM05X7R6
U03AS MAIN (PE0630)		C9515	75009877	CAPACITOR, CERAMIC CHIP (1005), GRM155B1
U03AS MAIN (PE0630)		C9516	75009877	CAPACITOR, CERAMIC CHIP (1005), GRM155B1
U03AS MAIN (PE0630)		C9517	75012557	CAPACITOR, CERA CHIP, 50V JB 102K 1005 SIZ
U03AS MAIN (PE0630)		C9518	75009874	CAPACITOR, CERAMIC CHIP (2012), GRM21BB3
U03AS MAIN (PE0630)		C9519	75009874	CAPACITOR, CERAMIC CHIP (2012), GRM21BB3
U03AS MAIN (PE0630)		C9534	75011120	CAPACITOR, CERAMIC CHIP (1005), CM05W5R
U03AS MAIN (PE0630)		C9535	75007603	CAPACITOR, CERAMIC CHIP(1005), CM05CH10
U03AS MAIN (PE0630)		C9538	75006005	CAPACITOR, CERAMIC CHIP (1005), CM05X7R6
U03AS MAIN (PE0630)		C9539	75009874	CAPACITOR, CERAMIC CHIP (2012), GRM21BB3
U03AS MAIN (PE0630)		C9540	75009874	CAPACITOR, CERAMIC CHIP (2012), GRM21BB3
U03AS MAIN (PE0630)		C9541	75009877	CAPACITOR, CERAMIC CHIP (1005), GRM155B1
U03AS MAIN (PE0630)		C9542	75009877	CAPACITOR, CERAMIC CHIP (1005), GRM155B1
U03AS MAIN (PE0630)		C9543	75009881	CAPACITOR, CERAMIC CHIP (2012), C2012JB1A
U03AS MAIN (PE0630)		C9544	75012557	CAPACITOR, CERA CHIP, 50V JB 102K 1005 SIZ
U03AS MAIN (PE0630)		C9545	75009928	CAPACITOR, CERAMIC CHIP (1608), CM105B47
U03AS MAIN (PE0630)		C9546	75009867	CAPACITOR, CERAMIC CHIP (1005), CM05B104
U03AS MAIN (PE0630)		C9547	75009867	CAPACITOR, CERAMIC CHIP (1005), CM05B104
U03AS MAIN (PE0630)		C9548	75009867	CAPACITOR, CERAMIC CHIP (1005), CM05B104

U03AS MAIN (PE0630)		C9549	75009867	CAPACITOR, CERAMIC CHIP (1005), CM05B104
U03AS MAIN (PE0630)		C9550	75009867	CAPACITOR, CERAMIC CHIP (1005), CM05B104
U03AS MAIN (PE0630)		C9551	75010503	CAPACITOR, CERAMIC CHIP (1005), GRM1552C
U03AS MAIN (PE0630)		C9552	75008346	CAPACITOR, CERAMIC CHIP(1005), GRM155B31
U03AS MAIN (PE0630)		C9553	75009881	CAPACITOR, CERAMIC CHIP (2012), C2012JB1A
U03AS MAIN (PE0630)		C9554	75009881	CAPACITOR, CERAMIC CHIP (2012), C2012JB1A
U03AS MAIN (PE0630)		C9555	75009881	CAPACITOR, CERAMIC CHIP (2012), C2012JB1A
U03AS MAIN (PE0630)		C9556	75009881	CAPACITOR, CERAMIC CHIP (2012), C2012JB1A
U03AS MAIN (PE0630)		C9557	75010503	CAPACITOR, CERAMIC CHIP (1005), GRM1552C
U03AS MAIN (PE0630)		C9558	75008346	CAPACITOR, CERAMIC CHIP(1005), GRM155B31
U03AS MAIN (PE0630)		C9559	75009876	CAPACITOR, CERAMIC CHIP (1608), GRM188B3
U03AS MAIN (PE0630)		C9560	75009239	CAPACITOR, CERAMIC CHIP(1608), CM105W5R
U03AS MAIN (PE0630)		C9561	75009867	CAPACITOR, CERAMIC CHIP (1005), CM05B104
U03AS MAIN (PE0630)		C9562	75009867	CAPACITOR, CERAMIC CHIP (1005), CM05B104
U03AS MAIN (PE0630)		C9563	75009867	CAPACITOR, CERAMIC CHIP (1005), CM05B104
U03AS MAIN (PE0630)		C9564	75009867	CAPACITOR, CERAMIC CHIP (1005), CM05B104
U03AS MAIN (PE0630)		C9565	75009867	CAPACITOR, CERAMIC CHIP (1005), CM05B104
U03AS MAIN (PE0630)		C9566	75009932	CAPACITOR, CARAMIC CHIP (1005), CM05W5R
U03AS MAIN (PE0630)		C9601	75009882	CAPACITOR, CERAMIC CHIP (3216), C3216JB1C
U03AS MAIN (PE0630)		C9602	75009882	CAPACITOR, CERAMIC CHIP (3216), C3216JB1C
U03AS MAIN (PE0630)		C9603	75009853	CAPACITOR, CERAMIC CHIP (1608), CM105W5R
U03AS MAIN (PE0630)		C9604	75009881	CAPACITOR, CERAMIC CHIP (2012), C2012JB1A
U03AS MAIN (PE0630)		C9605	75009881	CAPACITOR, CERAMIC CHIP (2012), C2012JB1A
U03AS MAIN (PE0630)		C9606	75009881	CAPACITOR, CERAMIC CHIP (2012), C2012JB1A
U03AS MAIN (PE0630)		C9607	75009881	CAPACITOR, CERAMIC CHIP (2012), C2012JB1A
U03AS MAIN (PE0630)		C9609	75009867	CAPACITOR, CERAMIC CHIP (1005), CM05B104
U03AS MAIN (PE0630)		C9611	75009873	CAPACITOR, CERAMIC CHIP (1608), GRM188B3
U03AS MAIN (PE0630)		C9612	75009867	CAPACITOR, CERAMIC CHIP (1005), CM05B104
U03AS MAIN (PE0630)		C9613	75009929	CAPACITOR, CERAMIC CHIP (2012), C2012JF1H
U03AS MAIN (PE0630)		C9614	75009929	CAPACITOR, CERAMIC CHIP (2012), C2012JF1H
U03AS MAIN (PE0630)		C9618	75010714	CAPACITOR, CERAMIC CHIP (1005), GRM155B1
U03AS MAIN (PE0630)		C9620	75009856	CAPACITOR, CERAMIC CHIP (1608), CM105W5R
U03AS MAIN (PE0630)		C9621	75009876	CAPACITOR, CERAMIC CHIP (1608), GRM188B3
U03AS MAIN (PE0630)		C9622	75009876	CAPACITOR, CERAMIC CHIP (1608), GRM188B3
U03AS MAIN (PE0630)		C9649	75009875	CAPACITOR, CERAMIC CHIP (1608), GRM188B3
U03AS MAIN (PE0630)		C9650	75009869	CAPACITOR, CERAMIC CHIP (1005), CM05X5R1
U03AS MAIN (PE0630)		C9651	75009863	CAPACITOR, CERAMIC CHIP (1005), CM05W5R1
U03AS MAIN (PE0630)		D1100	75010721	DIODE, ZENER, 02CZ6.2-Y(TE85R, F)
U03AS MAIN (PE0630)		D1101	75010721	DIODE, ZENER, 02CZ6.2-Y(TE85R, F)
U03AS MAIN (PE0630)		D1301	75010608	DIODE, 1SS388(TPH3, F)
U03AS MAIN (PE0630)		D1302	75010608	DIODE, 1SS388(TPH3, F)
U03AS MAIN (PE0630)		D1303	75010153	DIODE, ZENER, UDZSTE-176.2B
U03AS MAIN (PE0630)		D1304	75010153	DIODE, ZENER, UDZSTE-176.2B
U03AS MAIN (PE0630)		D1701	75010721	DIODE, ZENER, 02CZ6.2-Y(TE85R, F)
U03AS MAIN (PE0630)		D2105	75009899	DIODE, MA112-(TX)
U03AS MAIN (PE0630)		D2106	75009899	DIODE, MA112-(TX)
U03AS MAIN (PE0630)		D2201	75009899	DIODE, MA112-(TX)

U03AS MAIN (PE0630)		D2202	75009899	DIODE, MA112-(TX)
U03AS MAIN (PE0630)		D2800	75009899	DIODE, MA112-(TX)
U03AS MAIN (PE0630)		D6000	75011229	DIODE, ZENER, MAZS05100L
U03AS MAIN (PE0630)		D6002	75011229	DIODE, ZENER, MAZS05100L
U03AS MAIN (PE0630)		D6102	75012089	DIODE, MA2J11100L
U03AS MAIN (PE0630)		D6103	75012089	DIODE, MA2J11100L
U03AS MAIN (PE0630)		D6104	75012089	DIODE, MA2J11100L
U03AS MAIN (PE0630)		D6105	75012089	DIODE, MA2J11100L
U03AS MAIN (PE0630)		D6106	75012089	DIODE, MA2J11100L
U03AS MAIN (PE0630)		D6107	75012089	DIODE, MA2J11100L
U03AS MAIN (PE0630)		D6110	23357790	DIODE, ZENER, MA8220-M
U03AS MAIN (PE0630)		D6111	75012089	DIODE, MA2J11100L
U03AS MAIN (PE0630)		D6112	75012089	DIODE, MA2J11100L
U03AS MAIN (PE0630)		D6301	75009899	DIODE, MA112-(TX)
U03AS MAIN (PE0630)		D6302	75009899	DIODE, MA112-(TX)
U03AS MAIN (PE0630)		D6303	75009899	DIODE, MA112-(TX)
U03AS MAIN (PE0630)		D6304	75009899	DIODE, MA112-(TX)
U03AS MAIN (PE0630)		D6401	75012089	DIODE, MA2J11100L
U03AS MAIN (PE0630)		D6402	75012089	DIODE, MA2J11100L
U03AS MAIN (PE0630)		D6403	75012089	DIODE, MA2J11100L
U03AS MAIN (PE0630)		D6404	75012089	DIODE, MA2J11100L
U03AS MAIN (PE0630)		D9501	75009899	DIODE, MA112-(TX)
U03AS MAIN (PE0630)		D9502	75009899	DIODE, MA112-(TX)
U03AS MAIN (PE0630)		D9503	75009328	DIODE, RB055L-40
U03AS MAIN (PE0630)		D9505	75009900	DIODE, RB070M-30TFTR
U03AS MAIN (PE0630)		D9506	75009900	DIODE, RB070M-30TFTR
U03AS MAIN (PE0630)		D9508	75009899	DIODE, MA112-(TX)
U03AS MAIN (PE0630)		D9509	75009899	DIODE, MA112-(TX)
U03AS MAIN (PE0630)		D9601	75009328	DIODE, RB055L-40
U03AS MAIN (PE0630)		D9611	75010888	DIODE, RB160VA-40TR
U03AS MAIN (PE0630)		D9633	75008353	DIODE, 1SS352(TPH3, F)
U03AS MAIN (PE0630)		FL100	75003411	CHIP BEAD INDUCTOR, 220OHM 1.5A, FB MH1
U03AS MAIN (PE0630)		FL150	75003115	CHIP BEAD INDUCTOR, 220OHM 2.0A, BKP212
U03AS MAIN (PE0630)		FL151	75003112	CHIP BEAD INDUCTOR, 1.0KOHM 0.3A, BK160
U03AS MAIN (PE0630)		FL152	75003112	CHIP BEAD INDUCTOR, 1.0KOHM 0.3A, BK160
U03AS MAIN (PE0630)		FL153	75003114	CHIP BEAD INDUCTOR, 120OHMX4 0.2A, BK32
U03AS MAIN (PE0630)		FL154	75003113	CHIP BEAD INDUCTOR, 120OHM 0.5A, BK1608
U03AS MAIN (PE0630)		FL219	75010773	FILTER, SMD COMMON MODE, ACM2012-201-2
U03AS MAIN (PE0630)		FL220	75010773	FILTER, SMD COMMON MODE, ACM2012-201-2
U03AS MAIN (PE0630)		FL521	75003112	CHIP BEAD INDUCTOR, 1.0KOHM 0.3A, BK160
U03AS MAIN (PE0630)		FL522	75003112	CHIP BEAD INDUCTOR, 1.0KOHM 0.3A, BK160
U03AS MAIN (PE0630)		FL523	75003112	CHIP BEAD INDUCTOR, 1.0KOHM 0.3A, BK160
U03AS MAIN (PE0630)		FL524	75003112	CHIP BEAD INDUCTOR, 1.0KOHM 0.3A, BK160
U03AS MAIN (PE0630)		FL525	75003112	CHIP BEAD INDUCTOR, 1.0KOHM 0.3A, BK160
U03AS MAIN (PE0630)		FL526	75003114	CHIP BEAD INDUCTOR, 120OHMX4 0.2A, BK32
U03AS MAIN (PE0630)		FL702	75003410	CHIP BEAD INDUCTOR, 33OHM 4.0A, BKP2125
U03AS MAIN (PE0630)		FL800	75003115	CHIP BEAD INDUCTOR, 220OHM 2.0A, BKP212

U03AS MAIN (PE0630)		FL801	75003115	CHIP BEAD INDUCTOR, 220OHM 2.0A, BKP212
U03AS MAIN (PE0630)		FL851	75010717	FERRITE BEADS, CHIP, 700OHM 0.5A, BLM18E
U03AS MAIN (PE0630)		FL852	75009837	JUMPER, CHIP 1608TYPE, CR1/16 000V PB(F)
U03AS MAIN (PE0630)		FL853	75009837	JUMPER, CHIP 1608TYPE, CR1/16 000V PB(F)
U03AS MAIN (PE0630)		FL854	75009837	JUMPER, CHIP 1608TYPE, CR1/16 000V PB(F)
U03AS MAIN (PE0630)		FL900	75012564	FILTER, COMMON MODE, TCM2010L-131-4P-T
U03AS MAIN (PE0630)		FL901	75012564	FILTER, COMMON MODE, TCM2010L-131-4P-T
U03AS MAIN (PE0630)		FL902	75012564	FILTER, COMMON MODE, TCM2010L-131-4P-T
U03AS MAIN (PE0630)		FL950	75003115	CHIP BEAD INDUCTOR, 220OHM 2.0A, BKP212
U03AS MAIN (PE0630)		FL951	75003115	CHIP BEAD INDUCTOR, 220OHM 2.0A, BKP212
U03AS MAIN (PE0630)		FL952	75003115	CHIP BEAD INDUCTOR, 220OHM 2.0A, BKP212
U03AS MAIN (PE0630)		FL953	75003115	CHIP BEAD INDUCTOR, 220OHM 2.0A, BKP212
U03AS MAIN (PE0630)		FL954	75003115	CHIP BEAD INDUCTOR, 220OHM 2.0A, BKP212
U03AS MAIN (PE0630)		FL955	75003115	CHIP BEAD INDUCTOR, 220OHM 2.0A, BKP212
U03AS MAIN (PE0630)		FL956	75003117	CHIP BEAD INDUCTOR, 180OHM 1.5A, BKP160
U03AS MAIN (PE0630)		FL957	75003115	CHIP BEAD INDUCTOR, 220OHM 2.0A, BKP212
U03AS MAIN (PE0630)		FL958	75003115	CHIP BEAD INDUCTOR, 220OHM 2.0A, BKP212
U03AS MAIN (PE0630)		FL959	75003115	CHIP BEAD INDUCTOR, 220OHM 2.0A, BKP212
U03AS MAIN (PE0630)		FL960	75003115	CHIP BEAD INDUCTOR, 220OHM 2.0A, BKP212
U03AS MAIN (PE0630)		FL961	75003115	CHIP BEAD INDUCTOR, 220OHM 2.0A, BKP212
U03AS MAIN (PE0630)		FL962	75009852	CAPACITOR CERAMIC CHIP, 25V 104S
U03AS MAIN (PE0630)		FL963	75003115	CHIP BEAD INDUCTOR, 220OHM 2.0A, BKP212
U03AS MAIN (PE0630)		FL964	75003115	CHIP BEAD INDUCTOR, 220OHM 2.0A, BKP212
U03AS MAIN (PE0630)		FL965	75003115	CHIP BEAD INDUCTOR, 220OHM 2.0A, BKP212
U03AS MAIN (PE0630)		FL966	75009240	CAPACITOR, THREE TERMINAL CHIP, CKD510J
U03AS MAIN (PE0630)		FL967	75009837	JUMPER, CHIP 1608TYPE, CR1/16 000V PB(F)
U03AS MAIN (PE0630)		FL968	75009837	JUMPER, CHIP 1608TYPE, CR1/16 000V PB(F)
U03AS MAIN (PE0630)		FL969	75009837	JUMPER, CHIP 1608TYPE, CR1/16 000V PB(F)
U03AS MAIN (PE0630)		FL970	75003115	CHIP BEAD INDUCTOR, 220OHM 2.0A, BKP212
U03AS MAIN (PE0630)		FL971	75003115	CHIP BEAD INDUCTOR, 220OHM 2.0A, BKP212
U03AS MAIN (PE0630)		FL974	75009943	INDUCTOR, CHIP BEADS (1608), MPZ1608S221
U03AS MAIN (PE0630)		FL975	75009240	CAPACITOR, THREE TERMINAL CHIP, CKD510J
U03AS MAIN (PE0630)		FL976	75009943	INDUCTOR, CHIP BEADS (1608), MPZ1608S221
U03AS MAIN (PE0630)		FL977	75009240	CAPACITOR, THREE TERMINAL CHIP, CKD510J
U03AS MAIN (PE0630)		FL978	75008351	INDUCTOR, CHIP BEADS(1608), MPZ1608S300A
U03AS MAIN (PE0630)		FL980	75010306	BEADS INDUCTOR, CHIP (2012), MPZ2012S221
U03AS MAIN (PE0630)		FL981	75010306	BEADS INDUCTOR, CHIP (2012), MPZ2012S221
U03AS MAIN (PE0630)		IC100	75012569	IC, TM2338AL-LF
U03AS MAIN (PE0630)		IC150	75010726	IC, AT25DF321-SU
U03AS MAIN (PE0630)		IC151	75010726	IC, AT25DF321-SU
U03AS MAIN (PE0630)		IC152	75009046	IC, AT24C64CN-SH-T
U03AS MAIN (PE0630)		IC153	75012570	IC, PST3528NR
U03AS MAIN (PE0630)		IC160	75008355	IC, HY5DU561622ETP-4-C
U03AS MAIN (PE0630)		IC170	75012623	IC, M62320FP#DF5G
U03AS MAIN (PE0630)		IC171	75012623	IC, M62320FP#DF5G
U03AS MAIN (PE0630)		IC172	75012623	IC, M62320FP#DF5G
U03AS MAIN (PE0630)		IC200	75012567	IC, TC74HC4052A

U03AS MAIN (PE0630)		IC271	23085823	IC, MM1508XNRE
U03AS MAIN (PE0630)		IC272	23085823	IC, MM1508XNRE
U03AS MAIN (PE0630)		IC330	75008004	IC, CXB1444R-T6
U03AS MAIN (PE0630)		IC340	75011915	IC, M24C02-WMN6TP
U03AS MAIN (PE0630)		IC341	75012568	IC, TC7WBL125AFK(T5L, F
U03AS MAIN (PE0630)		IC350	75009903	IC, TC7SET08FU(TE85L, F
U03AS MAIN (PE0630)		IC351	75009903	IC, TC7SET08FU(TE85L, F
U03AS MAIN (PE0630)		IC387	75012571	IC, CAT24C08WI-GT3-H-RECV
U03AS MAIN (PE0630)		IC388	75008003	IC, TC7WB66FK(TE85L, F)
U03AS MAIN (PE0630)		IC602	75006542	IC, PQ033DNA1ZPH
U03AS MAIN (PE0630)		IC603	75009451	IC, STA333W13TR
U03AS MAIN (PE0630)		IC604	75010891	IC, TC7WBD125AFK(T5L, F
U03AS MAIN (PE0630)		IC610	75009908	IC, OP AMP, RC4580IPWR
U03AS MAIN (PE0630)		IC611	75009908	IC, OP AMP, RC4580IPWR
U03AS MAIN (PE0630)		IC641	75004445	IC, BH3544F-E2
U03AS MAIN (PE0630)		IC701	75012565	IC, TC74VHC244FK(EL, K)
U03AS MAIN (PE0630)		IC702	75012565	IC, TC74VHC244FK(EL, K)
U03AS MAIN (PE0630)		IC703	75012566	IC, TC74VHCT244AFK(E, K
U03AS MAIN (PE0630)		IC705	75012566	IC, TC74VHCT244AFK(E, K
U03AS MAIN (PE0630)		IC707	75012566	IC, TC74VHCT244AFK(E, K
U03AS MAIN (PE0630)		IC708	75012565	IC, TC74VHC244FK(EL, K)
U03AS MAIN (PE0630)		IC709	75012566	IC, TC74VHCT244AFK(E, K
U03AS MAIN (PE0630)		IC710	75012566	IC, TC74VHCT244AFK(E, K
U03AS MAIN (PE0630)		IC711	75001217	IC, TC7SH04FU
U03AS MAIN (PE0630)		IC712	75009954	IC, GATE, TC7W32FU(TE12L, F)
U03AS MAIN (PE0630)		IC713	75012566	IC, TC74VHCT244AFK(E, K
U03AS MAIN (PE0630)		IC714	75012565	IC, TC74VHC244FK(EL, K)
U03AS MAIN (PE0630)		IC716	75008688	IC, AAT4610AIGV-T1
U03AS MAIN (PE0630)		IC717	75009953	IC, GATE, TC7SH08FU(TE85L, F)
U03AS MAIN (PE0630)		IC781	75009953	IC, GATE, TC7SH08FU(TE85L, F)
U03AS MAIN (PE0630)		IC802	75011456	IC, DRX3975D-QI-B1
U03AS MAIN (PE0630)		IC921	75009902	IC, TC7SH86FU(TE85L, F)
U03AS MAIN (PE0630)		IC950	75010728	IC, PQ033ENA1ZPH
U03AS MAIN (PE0630)		IC951	75010728	IC, PQ033ENA1ZPH
U03AS MAIN (PE0630)		IC952	75010732	IC, MP2108DK-LF-Z
U03AS MAIN (PE0630)		IC953	75010732	IC, MP2108DK-LF-Z
U03AS MAIN (PE0630)		IC954	75010520	IC, MM1662GHBE
U03AS MAIN (PE0630)		IC955	75002293	IC, MM1661JHBE
U03AS MAIN (PE0630)		IC957	75002320	IC, TC7SH32FU(TE85L, F)
U03AS MAIN (PE0630)		IC960	75010898	IC, MP2367DNE-LF-Z
U03AS MAIN (PE0630)		IC961	75004806	IC, PQ6CU12X2APQ
U03AS MAIN (PE0630)		IC962	75005774	IC, R1154N090B-TR-F
U03AS MAIN (PE0630)		L1501	75003410	CHIP BEAD INDUCTOR, 33OHM 4.0A, BKP2125
U03AS MAIN (PE0630)		L1502	75003410	CHIP BEAD INDUCTOR, 33OHM 4.0A, BKP2125
U03AS MAIN (PE0630)		L2101	75009887	INDUCTOR, BEADS CHIP, BLM11A121SPT
U03AS MAIN (PE0630)		L2102	75009887	INDUCTOR, BEADS CHIP, BLM11A121SPT
U03AS MAIN (PE0630)		L2201	75009887	INDUCTOR, BEADS CHIP, BLM11A121SPT

U03AS MAIN (PE0630)		L2202	75009887	INDUCTOR, BEADS CHIP, BLM11A121SPT
U03AS MAIN (PE0630)		L2701	23103314	COIL, FILTER, TEM2028AH
U03AS MAIN (PE0630)		L2706	23246651	COIL, CHIP, TRF4100CG
U03AS MAIN (PE0630)		L6101	75008364	COIL, CHOKE, 22MMH M 1.7A, SLF7055T-220M
U03AS MAIN (PE0630)		L6102	75008364	COIL, CHOKE, 22MMH M 1.7A, SLF7055T-220M
U03AS MAIN (PE0630)		L6103	75008364	COIL, CHOKE, 22MMH M 1.7A, SLF7055T-220M
U03AS MAIN (PE0630)		L6104	75008364	COIL, CHOKE, 22MMH M 1.7A, SLF7055T-220M
U03AS MAIN (PE0630)		L6105	75008351	INDUCTOR, CHIP BEADS(1608), MPZ1608S300A
U03AS MAIN (PE0630)		L6106	75010718	BEADS INDUCTOR, CHIP, BLM11A102SPT
U03AS MAIN (PE0630)		L6108	75010306	BEADS INDUCTOR, CHIP (2012), MPZ2012S221
U03AS MAIN (PE0630)		L8501	23248385	COIL, CHOKE, TLN3278AA
U03AS MAIN (PE0630)		L9016	75003410	CHIP BEAD INDUCTOR, 33OHM 4.0A, BKP2125
U03AS MAIN (PE0630)		L9020	75003410	CHIP BEAD INDUCTOR, 33OHM 4.0A, BKP2125
U03AS MAIN (PE0630)		L9021	75003411	CHIP BEAD INDUCTOR, 220OHM 1.5A, FB MH1
U03AS MAIN (PE0630)		L9022	75003411	CHIP BEAD INDUCTOR, 220OHM 1.5A, FB MH1
U03AS MAIN (PE0630)		L9023	75003411	CHIP BEAD INDUCTOR, 220OHM 1.5A, FB MH1
U03AS MAIN (PE0630)		L9026	75003411	CHIP BEAD INDUCTOR, 220OHM 1.5A, FB MH1
U03AS MAIN (PE0630)		L9027	75003411	CHIP BEAD INDUCTOR, 220OHM 1.5A, FB MH1
U03AS MAIN (PE0630)		L9028	75003411	CHIP BEAD INDUCTOR, 220OHM 1.5A, FB MH1
U03AS MAIN (PE0630)		L9029	75003410	CHIP BEAD INDUCTOR, 33OHM 4.0A, BKP2125
U03AS MAIN (PE0630)		L9501	75009884	INDUCTOR, CHIP, SLF7032T-4R7M1R7-2PF
U03AS MAIN (PE0630)		L9502	75009884	INDUCTOR, CHIP, SLF7032T-4R7M1R7-2PF
U03AS MAIN (PE0630)		L9601	75010980	COIL, CHOKE, 15MMH 3.1A, SLF10165T-150M3
U03AS MAIN (PE0630)		L9612	75010869	INDUCTOR, CHIP (3225), NLCV32T-680K-PF
U03AS MAIN (PE0630)		L9613	75010870	INDUCTOR, CHIP (3225), NLCV32T-2R2M-PF
U03AS MAIN (PE0630)		NB001	23961276	SOLDER CREAM
U03AS MAIN (PE0630)		NB002	23961260	ER M708E-3.0
U03AS MAIN (PE0630)		NB003	23961257	R M708E 400G
U03AS MAIN (PE0630)		NB004	23961293	S-1061SP-2 C
U03AS MAIN (PE0630)		NB005	23961265	M705ESC 1.0
U03AS MAIN (PE0630)		NB006	23961267	M705ESC 1.6
U03AS MAIN (PE0630)		NB007	23962411	AD EP 3609
U03AS MAIN (PE0630)		NB008	23964124	SOL #4520 UN
U03AS MAIN (PE0630)		P150A	75010719	CONNECTOR, 87BFN-030S-1F
U03AS MAIN (PE0630)		P322A	75010374	CONNECTOR, BM31B-SHLVS-G-TBT(LF)(SN)
U03AS MAIN (PE0630)		P521A	75010879	CONNECTOR, B12B-PH-K-S(LF)(SN)
U03AS MAIN (PE0630)		P601	75002147	CONNECTOR, B4B-EH(LF)
U03AS MAIN (PE0630)		P6061	23365444	EARPHONE JACK, D3.5
U03AS MAIN (PE0630)		P810B	75007618	CONNECTOR, 2.0MM PITCH NYLON, B9B-PH-K-
U03AS MAIN (PE0630)		P811B	75008267	CONNECTOR, W-B 2.0MM 14P VERTICAL, B14B
U03AS MAIN (PE0630)		P920A	75009892	CONNECTOR, 2MM PITCH W TO B, B7B-PH-K-S
U03AS MAIN (PE0630)		PB03A	V28A000822A1	PC BOARD 32AV555D_MAIN_PE0630
U03AS MAIN (PE0630)		PJ700	75012538	SOCKET, PCMCIA, TV51EE20090
U03AS MAIN (PE0630)		PV201	75001989	CONNECTOR, MULTI 21P, CSS5021-9C01F
U03AS MAIN (PE0630)		PV202	75001989	CONNECTOR, MULTI 21P, CSS5021-9C01F
U03AS MAIN (PE0630)		PV240	75001872	PIN JACK, 10/10P ST
U03AS MAIN (PE0630)		PV320	75011085	CONNECTOR, CSS5019-4K31F

U03AS MAIN (PE0630)		PV321	75011085	CONNECTOR, CSS5019-4K31F
U03AS MAIN (PE0630)		Q1001	75009815	TRANSISTOR, 2SC4116-Y(TE85L, F)
U03AS MAIN (PE0630)		Q1002	75009897	TRANSISTOR, 2SA1586-Y(TE85L, F)
U03AS MAIN (PE0630)		Q1301	75001961	TRANSISTOR, FET, 2SK2035(TE85L, F)
U03AS MAIN (PE0630)		Q1302	75001961	TRANSISTOR, FET, 2SK2035(TE85L, F)
U03AS MAIN (PE0630)		Q1501	75009815	TRANSISTOR, 2SC4116-Y(TE85L, F)
U03AS MAIN (PE0630)		Q1502	75009815	TRANSISTOR, 2SC4116-Y(TE85L, F)
U03AS MAIN (PE0630)		Q1503	75009815	TRANSISTOR, 2SC4116-Y(TE85L, F)
U03AS MAIN (PE0630)		Q1701	75009815	TRANSISTOR, 2SC4116-Y(TE85L, F)
U03AS MAIN (PE0630)		Q1702	75009815	TRANSISTOR, 2SC4116-Y(TE85L, F)
U03AS MAIN (PE0630)		Q1703	75009815	TRANSISTOR, 2SC4116-Y(TE85L, F)
U03AS MAIN (PE0630)		Q1704	75009815	TRANSISTOR, 2SC4116-Y(TE85L, F)
U03AS MAIN (PE0630)		Q2105	75007621	TRANSISTOR, 2SC3326-B(TE85R, F)
U03AS MAIN (PE0630)		Q2106	75007621	TRANSISTOR, 2SC3326-B(TE85R, F)
U03AS MAIN (PE0630)		Q2107	75007621	TRANSISTOR, 2SC3326-B(TE85R, F)
U03AS MAIN (PE0630)		Q2108	75007621	TRANSISTOR, 2SC3326-B(TE85R, F)
U03AS MAIN (PE0630)		Q2109	75006019	TRANSISTOR, RN2404(TE85L, F)
U03AS MAIN (PE0630)		Q2201	75007621	TRANSISTOR, 2SC3326-B(TE85R, F)
U03AS MAIN (PE0630)		Q2202	75007621	TRANSISTOR, 2SC3326-B(TE85R, F)
U03AS MAIN (PE0630)		Q2203	75007621	TRANSISTOR, 2SC3326-B(TE85R, F)
U03AS MAIN (PE0630)		Q2204	75007621	TRANSISTOR, 2SC3326-B(TE85R, F)
U03AS MAIN (PE0630)		Q2205	75006019	TRANSISTOR, RN2404(TE85L, F)
U03AS MAIN (PE0630)		Q2206	75002029	TRANSISTOR, 2SC4081
U03AS MAIN (PE0630)		Q2701	75007619	TRANSISTOR, 2SA1162-Y(TE85R, F)
U03AS MAIN (PE0630)		Q2702	75009895	TRANSISTOR, RN1404(TE85L, F)
U03AS MAIN (PE0630)		Q2703	75009895	TRANSISTOR, RN1404(TE85L, F)
U03AS MAIN (PE0630)		Q2711	75007619	TRANSISTOR, 2SA1162-Y(TE85R, F)
U03AS MAIN (PE0630)		Q2712	75009895	TRANSISTOR, RN1404(TE85L, F)
U03AS MAIN (PE0630)		Q2713	75009895	TRANSISTOR, RN1404(TE85L, F)
U03AS MAIN (PE0630)		Q2803	75009897	TRANSISTOR, 2SA1586-Y(TE85L, F)
U03AS MAIN (PE0630)		Q2804	75009897	TRANSISTOR, 2SA1586-Y(TE85L, F)
U03AS MAIN (PE0630)		Q2805	75009815	TRANSISTOR, 2SC4116-Y(TE85L, F)
U03AS MAIN (PE0630)		Q2806	75009815	TRANSISTOR, 2SC4116-Y(TE85L, F)
U03AS MAIN (PE0630)		Q6000	75009815	TRANSISTOR, 2SC4116-Y(TE85L, F)
U03AS MAIN (PE0630)		Q6101	75009815	TRANSISTOR, 2SC4116-Y(TE85L, F)
U03AS MAIN (PE0630)		Q6301	75002029	TRANSISTOR, 2SC4081
U03AS MAIN (PE0630)		Q6302	75002029	TRANSISTOR, 2SC4081
U03AS MAIN (PE0630)		Q6303	75002029	TRANSISTOR, 2SC4081
U03AS MAIN (PE0630)		Q6304	75006019	TRANSISTOR, RN2404(TE85L, F)
U03AS MAIN (PE0630)		Q6305	75006019	TRANSISTOR, RN2404(TE85L, F)
U03AS MAIN (PE0630)		Q6306	75007619	TRANSISTOR, 2SA1162-Y(TE85R, F)
U03AS MAIN (PE0630)		Q6401	75009815	TRANSISTOR, 2SC4116-Y(TE85L, F)
U03AS MAIN (PE0630)		Q8501	75009815	TRANSISTOR, 2SC4116-Y(TE85L, F)
U03AS MAIN (PE0630)		Q8502	75009815	TRANSISTOR, 2SC4116-Y(TE85L, F)
U03AS MAIN (PE0630)		Q8503	75009815	TRANSISTOR, 2SC4116-Y(TE85L, F)
U03AS MAIN (PE0630)		Q9500	75009815	TRANSISTOR, 2SC4116-Y(TE85L, F)
U03AS MAIN (PE0630)		Q9501	75009946	TRANSISTOR, FET, FDC602P_NF40

U03AS MAIN (PE0630)		Q9601	75001962	TRANSISTOR, DTC144EUAT106
U03AS MAIN (PE0630)		Q9602	75002029	TRANSISTOR, 2SC4081
U03AS MAIN (PE0630)		Q9621	75010885	TRANSISTOR, RN2403(TE85L, F)
U03AS MAIN (PE0630)		Q9622	75009895	TRANSISTOR, RN1404(TE85L, F)
U03AS MAIN (PE0630)		Q9623	75009815	TRANSISTOR, 2SC4116-Y(TE85L, F)
U03AS MAIN (PE0630)		Q9624	23205583	TRANSISTOR, FET, RSQ035P03TR
U03AS MAIN (PE0630)		R1001	75009835	RESISTOR, CHIP (1005), CR1/16S 560JV PB(F)
U03AS MAIN (PE0630)		R1002	75009835	RESISTOR, CHIP (1005), CR1/16S 560JV PB(F)
U03AS MAIN (PE0630)		R1003	75009835	RESISTOR, CHIP (1005), CR1/16S 560JV PB(F)
U03AS MAIN (PE0630)		R1004	75009835	RESISTOR, CHIP (1005), CR1/16S 560JV PB(F)
U03AS MAIN (PE0630)		R1005	75009850	RESISTOR, CHIP (1005), CR1/16S 103JV PB(F)
U03AS MAIN (PE0630)		R1006	75009845	RESISTOR, CHIP (1005), CR1/16S 471JV PB(F)
U03AS MAIN (PE0630)		R1007	75009835	RESISTOR, CHIP (1005), CR1/16S 560JV PB(F)
U03AS MAIN (PE0630)		R1008	75009835	RESISTOR, CHIP (1005), CR1/16S 560JV PB(F)
U03AS MAIN (PE0630)		R1009	75009835	RESISTOR, CHIP (1005), CR1/16S 560JV PB(F)
U03AS MAIN (PE0630)		R1010	75009845	RESISTOR, CHIP (1005), CR1/16S 471JV PB(F)
U03AS MAIN (PE0630)		R1012	75012543	RESISTOR, CHIP(2012), CR1/10 272JV PB(F)
U03AS MAIN (PE0630)		R1013	75012548	RESISTOR, CHIP(1005), CR1/16S 391FV PB(F)
U03AS MAIN (PE0630)		R1014	75009835	RESISTOR, CHIP (1005), CR1/16S 560JV PB(F)
U03AS MAIN (PE0630)		R1015	75009835	RESISTOR, CHIP (1005), CR1/16S 560JV PB(F)
U03AS MAIN (PE0630)		R1016	75009835	RESISTOR, CHIP (1005), CR1/16S 560JV PB(F)
U03AS MAIN (PE0630)		R1017	75009835	RESISTOR, CHIP (1005), CR1/16S 560JV PB(F)
U03AS MAIN (PE0630)		R1018	75009835	RESISTOR, CHIP (1005), CR1/16S 560JV PB(F)
U03AS MAIN (PE0630)		R1019	75009835	RESISTOR, CHIP (1005), CR1/16S 560JV PB(F)
U03AS MAIN (PE0630)		R1020	75009835	RESISTOR, CHIP (1005), CR1/16S 560JV PB(F)
U03AS MAIN (PE0630)		R1021	75009843	RESISTOR, CHIP (1005), CR1/16S 470JV PB(F)
U03AS MAIN (PE0630)		R1022	75009843	RESISTOR, CHIP (1005), CR1/16S 470JV PB(F)
U03AS MAIN (PE0630)		R1023	75009845	RESISTOR, CHIP (1005), CR1/16S 471JV PB(F)
U03AS MAIN (PE0630)		R1026	75012549	RESISTOR, CHIP(1005), CR1/16S 201DV PB(F)
U03AS MAIN (PE0630)		R1027	75011425	RESISTOR, CHIP (1005), CR1/16S 181DV PB(F)
U03AS MAIN (PE0630)		R1028	75007593	RESISTOR, CHIP(1005), ERJ2RKF33R0X
U03AS MAIN (PE0630)		R1100	75009834	RESISTOR, CHIP (1005), CR1/16S 103JV PB(F)
U03AS MAIN (PE0630)		R1101	75009834	RESISTOR, CHIP (1005), CR1/16S 103JV PB(F)
U03AS MAIN (PE0630)		R1102	75009834	RESISTOR, CHIP (1005), CR1/16S 103JV PB(F)
U03AS MAIN (PE0630)		R1103	75005803	RESISTOR, CHIP, 1005 CR1/16S 123JV PB(F)
U03AS MAIN (PE0630)		R1104	75009834	RESISTOR, CHIP (1005), CR1/16S 103JV PB(F)
U03AS MAIN (PE0630)		R1105	75005803	RESISTOR, CHIP, 1005 CR1/16S 123JV PB(F)
U03AS MAIN (PE0630)		R1106	75005803	RESISTOR, CHIP, 1005 CR1/16S 123JV PB(F)
U03AS MAIN (PE0630)		R1107	75009834	RESISTOR, CHIP (1005), CR1/16S 103JV PB(F)
U03AS MAIN (PE0630)		R1108	75009834	RESISTOR, CHIP (1005), CR1/16S 103JV PB(F)
U03AS MAIN (PE0630)		R1109	75009834	RESISTOR, CHIP (1005), CR1/16S 103JV PB(F)
U03AS MAIN (PE0630)		R1110	75005803	RESISTOR, CHIP, 1005 CR1/16S 123JV PB(F)
U03AS MAIN (PE0630)		R1111	75009834	RESISTOR, CHIP (1005), CR1/16S 103JV PB(F)
U03AS MAIN (PE0630)		R1112	75005803	RESISTOR, CHIP, 1005 CR1/16S 123JV PB(F)
U03AS MAIN (PE0630)		R1113	75005803	RESISTOR, CHIP, 1005 CR1/16S 123JV PB(F)
U03AS MAIN (PE0630)		R1114	75005803	RESISTOR, CHIP, 1005 CR1/16S 123JV PB(F)
U03AS MAIN (PE0630)		R1115	75005803	RESISTOR, CHIP, 1005 CR1/16S 123JV PB(F)

U03AS MAIN (PE0630)		R1116	75009844	RESISTOR, CHIP (1005), CR1/16S 101JV PB(F)
U03AS MAIN (PE0630)		R1118	75009844	RESISTOR, CHIP (1005), CR1/16S 101JV PB(F)
U03AS MAIN (PE0630)		R1119	75009844	RESISTOR, CHIP (1005), CR1/16S 101JV PB(F)
U03AS MAIN (PE0630)		R1120	75009844	RESISTOR, CHIP (1005), CR1/16S 101JV PB(F)
U03AS MAIN (PE0630)		R1121	75009844	RESISTOR, CHIP (1005), CR1/16S 101JV PB(F)
U03AS MAIN (PE0630)		R1122	75009844	RESISTOR, CHIP (1005), CR1/16S 101JV PB(F)
U03AS MAIN (PE0630)		R1124	75009844	RESISTOR, CHIP (1005), CR1/16S 101JV PB(F)
U03AS MAIN (PE0630)		R1125	75009844	RESISTOR, CHIP (1005), CR1/16S 101JV PB(F)
U03AS MAIN (PE0630)		R1126	75010119	RESISTOR, CHIP (1608), CR1/16 223JV PB(F)
U03AS MAIN (PE0630)		R1127	75010119	RESISTOR, CHIP (1608), CR1/16 223JV PB(F)
U03AS MAIN (PE0630)		R1130	75009844	RESISTOR, CHIP (1005), CR1/16S 101JV PB(F)
U03AS MAIN (PE0630)		R1131	75009844	RESISTOR, CHIP (1005), CR1/16S 101JV PB(F)
U03AS MAIN (PE0630)		R1132	75009844	RESISTOR, CHIP (1005), CR1/16S 101JV PB(F)
U03AS MAIN (PE0630)		R1133	75009844	RESISTOR, CHIP (1005), CR1/16S 101JV PB(F)
U03AS MAIN (PE0630)		R1137	75010119	RESISTOR, CHIP (1608), CR1/16 223JV PB(F)
U03AS MAIN (PE0630)		R1138	75010119	RESISTOR, CHIP (1608), CR1/16 223JV PB(F)
U03AS MAIN (PE0630)		R1139	75010119	RESISTOR, CHIP (1608), CR1/16 223JV PB(F)
U03AS MAIN (PE0630)		R1140	75010119	RESISTOR, CHIP (1608), CR1/16 223JV PB(F)
U03AS MAIN (PE0630)		R1203	75009844	RESISTOR, CHIP (1005), CR1/16S 101JV PB(F)
U03AS MAIN (PE0630)		R1204	75009844	RESISTOR, CHIP (1005), CR1/16S 101JV PB(F)
U03AS MAIN (PE0630)		R1205	75009844	RESISTOR, CHIP (1005), CR1/16S 101JV PB(F)
U03AS MAIN (PE0630)		R1206	75009844	RESISTOR, CHIP (1005), CR1/16S 101JV PB(F)
U03AS MAIN (PE0630)		R1207	75009844	RESISTOR, CHIP (1005), CR1/16S 101JV PB(F)
U03AS MAIN (PE0630)		R1208	75009844	RESISTOR, CHIP (1005), CR1/16S 101JV PB(F)
U03AS MAIN (PE0630)		R1209	75009844	RESISTOR, CHIP (1005), CR1/16S 101JV PB(F)
U03AS MAIN (PE0630)		R1210	75009844	RESISTOR, CHIP (1005), CR1/16S 101JV PB(F)
U03AS MAIN (PE0630)		R1211	75009844	RESISTOR, CHIP (1005), CR1/16S 101JV PB(F)
U03AS MAIN (PE0630)		R1212	75009844	RESISTOR, CHIP (1005), CR1/16S 101JV PB(F)
U03AS MAIN (PE0630)		R1213	75009844	RESISTOR, CHIP (1005), CR1/16S 101JV PB(F)
U03AS MAIN (PE0630)		R1214	75009844	RESISTOR, CHIP (1005), CR1/16S 101JV PB(F)
U03AS MAIN (PE0630)		R1215	75009844	RESISTOR, CHIP (1005), CR1/16S 101JV PB(F)
U03AS MAIN (PE0630)		R1216	75009844	RESISTOR, CHIP (1005), CR1/16S 101JV PB(F)
U03AS MAIN (PE0630)		R1217	75009844	RESISTOR, CHIP (1005), CR1/16S 101JV PB(F)
U03AS MAIN (PE0630)		R1218	75009840	RESISTOR, CHIP (1005), CR1/16S 102JV PB(F)
U03AS MAIN (PE0630)		R1219	75009850	RESISTOR, CHIP (1005), CR1/16S 103JV PB(F)
U03AS MAIN (PE0630)		R1220	75012543	RESISTOR, CHIP(2012), CR1/10 272JV PB(F)
U03AS MAIN (PE0630)		R1221	75008336	RESISTOR, CHIP(1005), CR1/16S 102JV PB(F)
U03AS MAIN (PE0630)		R1222	75008336	RESISTOR, CHIP(1005), CR1/16S 102JV PB(F)
U03AS MAIN (PE0630)		R1223	75008336	RESISTOR, CHIP(1005), CR1/16S 102JV PB(F)
U03AS MAIN (PE0630)		R1224	75009844	RESISTOR, CHIP (1005), CR1/16S 101JV PB(F)
U03AS MAIN (PE0630)		R1225	75009844	RESISTOR, CHIP (1005), CR1/16S 101JV PB(F)
U03AS MAIN (PE0630)		R1226	75009844	RESISTOR, CHIP (1005), CR1/16S 101JV PB(F)
U03AS MAIN (PE0630)		R1227	75009835	RESISTOR, CHIP (1005), CR1/16S 560JV PB(F)
U03AS MAIN (PE0630)		R1228	75009835	RESISTOR, CHIP (1005), CR1/16S 560JV PB(F)
U03AS MAIN (PE0630)		R1232	75009844	RESISTOR, CHIP (1005), CR1/16S 101JV PB(F)
U03AS MAIN (PE0630)		R1234	75007596	RESISTOR, CHIP(1005), CR1/16S 100JV PB(F)
U03AS MAIN (PE0630)		R1235	75007596	RESISTOR, CHIP(1005), CR1/16S 100JV PB(F)

U03AS MAIN (PE0630)		R1290	75007596	RESISTOR, CHIP(1005), CR1/16S 100JV PB(F)
U03AS MAIN (PE0630)		R1291	75007596	RESISTOR, CHIP(1005), CR1/16S 100JV PB(F)
U03AS MAIN (PE0630)		R1292	75007596	RESISTOR, CHIP(1005), CR1/16S 100JV PB(F)
U03AS MAIN (PE0630)		R1293	75007596	RESISTOR, CHIP(1005), CR1/16S 100JV PB(F)
U03AS MAIN (PE0630)		R1294	75007596	RESISTOR, CHIP(1005), CR1/16S 100JV PB(F)
U03AS MAIN (PE0630)		R1295	75007596	RESISTOR, CHIP(1005), CR1/16S 100JV PB(F)
U03AS MAIN (PE0630)		R1296	75007596	RESISTOR, CHIP(1005), CR1/16S 100JV PB(F)
U03AS MAIN (PE0630)		R1297	75007596	RESISTOR, CHIP(1005), CR1/16S 100JV PB(F)
U03AS MAIN (PE0630)		R1298	75007596	RESISTOR, CHIP(1005), CR1/16S 100JV PB(F)
U03AS MAIN (PE0630)		R1299	75007596	RESISTOR, CHIP(1005), CR1/16S 100JV PB(F)
U03AS MAIN (PE0630)		R1301	75009851	JUMPER, CHIP 1005TYPE, CR1/16S 000V PB(F)
U03AS MAIN (PE0630)		R1302	75009844	RESISTOR, CHIP (1005), CR1/16S 101JV PB(F)
U03AS MAIN (PE0630)		R1303	75009844	RESISTOR, CHIP (1005), CR1/16S 101JV PB(F)
U03AS MAIN (PE0630)		R1304	75009847	RESISTOR, CHIP (1005), CR1/16S 472JV PB(F)
U03AS MAIN (PE0630)		R1305	75009850	RESISTOR, CHIP (1005), CR1/16S 103JV PB(F)
U03AS MAIN (PE0630)		R1306	75009847	RESISTOR, CHIP (1005), CR1/16S 472JV PB(F)
U03AS MAIN (PE0630)		R1307	75009850	RESISTOR, CHIP (1005), CR1/16S 103JV PB(F)
U03AS MAIN (PE0630)		R1308	75010143	CHIP JUMPER, 1608TYPE, CR1/16 000V PB(F)
U03AS MAIN (PE0630)		R1310	75009834	RESISTOR, CHIP (1005), CR1/16S 103JV PB(F)
U03AS MAIN (PE0630)		R1311	75009847	RESISTOR, CHIP (1005), CR1/16S 472JV PB(F)
U03AS MAIN (PE0630)		R1312	75009847	RESISTOR, CHIP (1005), CR1/16S 472JV PB(F)
U03AS MAIN (PE0630)		R1313	75009844	RESISTOR, CHIP (1005), CR1/16S 101JV PB(F)
U03AS MAIN (PE0630)		R1314	75009844	RESISTOR, CHIP (1005), CR1/16S 101JV PB(F)
U03AS MAIN (PE0630)		R1315	75009844	RESISTOR, CHIP (1005), CR1/16S 101JV PB(F)
U03AS MAIN (PE0630)		R1316	75009844	RESISTOR, CHIP (1005), CR1/16S 101JV PB(F)
U03AS MAIN (PE0630)		R1317	75007596	RESISTOR, CHIP(1005), CR1/16S 100JV PB(F)
U03AS MAIN (PE0630)		R1318	75007596	RESISTOR, CHIP(1005), CR1/16S 100JV PB(F)
U03AS MAIN (PE0630)		R1319	75009844	RESISTOR, CHIP (1005), CR1/16S 101JV PB(F)
U03AS MAIN (PE0630)		R1320	75009840	RESISTOR, CHIP (1005), CR1/16S 102JV PB(F)
U03AS MAIN (PE0630)		R1321	75007984	RESISTOR, CHIP(1005), CR1/16S 105JV PB(F)
U03AS MAIN (PE0630)		R1322	75009842	RESISTOR, CHIP (1005), CR1/16S 330JV PB(F)
U03AS MAIN (PE0630)		R1323	75012553	RESISTOR, CHIP(1005), RK73H1ETTP9100F
U03AS MAIN (PE0630)		R1421	75009847	RESISTOR, CHIP (1005), CR1/16S 472JV PB(F)
U03AS MAIN (PE0630)		R1422	75009847	RESISTOR, CHIP (1005), CR1/16S 472JV PB(F)
U03AS MAIN (PE0630)		R1502	75009834	RESISTOR, CHIP (1005), CR1/16S 103JV PB(F)
U03AS MAIN (PE0630)		R1503	75009834	RESISTOR, CHIP (1005), CR1/16S 103JV PB(F)
U03AS MAIN (PE0630)		R1505	75009834	RESISTOR, CHIP (1005), CR1/16S 103JV PB(F)
U03AS MAIN (PE0630)		R1506	75008336	RESISTOR, CHIP(1005), CR1/16S 102JV PB(F)
U03AS MAIN (PE0630)		R1508	75008336	RESISTOR, CHIP(1005), CR1/16S 102JV PB(F)
U03AS MAIN (PE0630)		R1509	75009847	RESISTOR, CHIP (1005), CR1/16S 472JV PB(F)
U03AS MAIN (PE0630)		R1510	75009847	RESISTOR, CHIP (1005), CR1/16S 472JV PB(F)
U03AS MAIN (PE0630)		R1511	75005998	RESISTOR, CHIP (1005), CR1/16S 333JV PB(F)
U03AS MAIN (PE0630)		R1512	75009847	RESISTOR, CHIP (1005), CR1/16S 472JV PB(F)
U03AS MAIN (PE0630)		R1513	75008532	RESISTOR, CHIP(1005), CR1/16S 182JV PB(F)
U03AS MAIN (PE0630)		R1514	75005998	RESISTOR, CHIP (1005), CR1/16S 333JV PB(F)
U03AS MAIN (PE0630)		R1515	75005985	RESISTOR, CHIP (1005), CR1/16S 332JV PB(F)
U03AS MAIN (PE0630)		R1516	75007596	RESISTOR, CHIP(1005), CR1/16S 100JV PB(F)

U03AS MAIN (PE0630)		R1517	75007596	RESISTOR, CHIP(1005), CR1/16S 100JV PB(F)
U03AS MAIN (PE0630)		R1519	75009847	RESISTOR, CHIP (1005), CR1/16S 472JV PB(F)
U03AS MAIN (PE0630)		R1520	75009847	RESISTOR, CHIP (1005), CR1/16S 472JV PB(F)
U03AS MAIN (PE0630)		R1521	75009847	RESISTOR, CHIP (1005), CR1/16S 472JV PB(F)
U03AS MAIN (PE0630)		R1522	75009847	RESISTOR, CHIP (1005), CR1/16S 472JV PB(F)
U03AS MAIN (PE0630)		R1523	75009834	RESISTOR, CHIP (1005), CR1/16S 103JV PB(F)
U03AS MAIN (PE0630)		R1524	75008336	RESISTOR, CHIP(1005), CR1/16S 102JV PB(F)
U03AS MAIN (PE0630)		R1601	75009841	RESISTOR, CHIP (1005), CR1/16S 220JV PB(F)
U03AS MAIN (PE0630)		R1602	75009841	RESISTOR, CHIP (1005), CR1/16S 220JV PB(F)
U03AS MAIN (PE0630)		R1603	75009841	RESISTOR, CHIP (1005), CR1/16S 220JV PB(F)
U03AS MAIN (PE0630)		R1604	75009841	RESISTOR, CHIP (1005), CR1/16S 220JV PB(F)
U03AS MAIN (PE0630)		R1605	75009841	RESISTOR, CHIP (1005), CR1/16S 220JV PB(F)
U03AS MAIN (PE0630)		R1606	75009835	RESISTOR, CHIP (1005), CR1/16S 560JV PB(F)
U03AS MAIN (PE0630)		R1607	75009835	RESISTOR, CHIP (1005), CR1/16S 560JV PB(F)
U03AS MAIN (PE0630)		R1608	75009835	RESISTOR, CHIP (1005), CR1/16S 560JV PB(F)
U03AS MAIN (PE0630)		R1609	75009835	RESISTOR, CHIP (1005), CR1/16S 560JV PB(F)
U03AS MAIN (PE0630)		R1610	75012550	RESISTOR, CHIP(1005), CR1/16S 301DV PB(F)
U03AS MAIN (PE0630)		R1611	75009835	RESISTOR, CHIP (1005), CR1/16S 560JV PB(F)
U03AS MAIN (PE0630)		R1612	75009841	RESISTOR, CHIP (1005), CR1/16S 220JV PB(F)
U03AS MAIN (PE0630)		R1701	75009844	RESISTOR, CHIP (1005), CR1/16S 101JV PB(F)
U03AS MAIN (PE0630)		R1702	75009850	RESISTOR, CHIP (1005), CR1/16S 103JV PB(F)
U03AS MAIN (PE0630)		R1703	75009850	RESISTOR, CHIP (1005), CR1/16S 103JV PB(F)
U03AS MAIN (PE0630)		R1704	75009850	RESISTOR, CHIP (1005), CR1/16S 103JV PB(F)
U03AS MAIN (PE0630)		R1705	75009850	RESISTOR, CHIP (1005), CR1/16S 103JV PB(F)
U03AS MAIN (PE0630)		R1706	75009850	RESISTOR, CHIP (1005), CR1/16S 103JV PB(F)
U03AS MAIN (PE0630)		R1707	75009850	RESISTOR, CHIP (1005), CR1/16S 103JV PB(F)
U03AS MAIN (PE0630)		R1708	75009850	RESISTOR, CHIP (1005), CR1/16S 103JV PB(F)
U03AS MAIN (PE0630)		R1709	75009850	RESISTOR, CHIP (1005), CR1/16S 103JV PB(F)
U03AS MAIN (PE0630)		R1710	75009850	RESISTOR, CHIP (1005), CR1/16S 103JV PB(F)
U03AS MAIN (PE0630)		R1711	75009850	RESISTOR, CHIP (1005), CR1/16S 103JV PB(F)
U03AS MAIN (PE0630)		R1712	75009850	RESISTOR, CHIP (1005), CR1/16S 103JV PB(F)
U03AS MAIN (PE0630)		R1713	75009850	RESISTOR, CHIP (1005), CR1/16S 103JV PB(F)
U03AS MAIN (PE0630)		R1714	75009850	RESISTOR, CHIP (1005), CR1/16S 103JV PB(F)
U03AS MAIN (PE0630)		R1716	75009850	RESISTOR, CHIP (1005), CR1/16S 103JV PB(F)
U03AS MAIN (PE0630)		R1719	75009850	RESISTOR, CHIP (1005), CR1/16S 103JV PB(F)
U03AS MAIN (PE0630)		R1720	75009850	RESISTOR, CHIP (1005), CR1/16S 103JV PB(F)
U03AS MAIN (PE0630)		R1722	75009850	RESISTOR, CHIP (1005), CR1/16S 103JV PB(F)
U03AS MAIN (PE0630)		R1724	75009850	RESISTOR, CHIP (1005), CR1/16S 103JV PB(F)
U03AS MAIN (PE0630)		R1726	75009850	RESISTOR, CHIP (1005), CR1/16S 103JV PB(F)
U03AS MAIN (PE0630)		R1727	75009850	RESISTOR, CHIP (1005), CR1/16S 103JV PB(F)
U03AS MAIN (PE0630)		R1728	75009850	RESISTOR, CHIP (1005), CR1/16S 103JV PB(F)
U03AS MAIN (PE0630)		R1729	75009850	RESISTOR, CHIP (1005), CR1/16S 103JV PB(F)
U03AS MAIN (PE0630)		R1730	75009850	RESISTOR, CHIP (1005), CR1/16S 103JV PB(F)
U03AS MAIN (PE0630)		R1732	75009850	RESISTOR, CHIP (1005), CR1/16S 103JV PB(F)
U03AS MAIN (PE0630)		R1734	75009850	RESISTOR, CHIP (1005), CR1/16S 103JV PB(F)
U03AS MAIN (PE0630)		R1735	75009850	RESISTOR, CHIP (1005), CR1/16S 103JV PB(F)
U03AS MAIN (PE0630)		R1736	75009850	RESISTOR, CHIP (1005), CR1/16S 103JV PB(F)

U03AS MAIN (PE0630)		R1737	75009850	RESISTOR, CHIP (1005), CR1/16S 103JV PB(F)
U03AS MAIN (PE0630)		R1738	75009850	RESISTOR, CHIP (1005), CR1/16S 103JV PB(F)
U03AS MAIN (PE0630)		R1739	75009850	RESISTOR, CHIP (1005), CR1/16S 103JV PB(F)
U03AS MAIN (PE0630)		R1741	75009850	RESISTOR, CHIP (1005), CR1/16S 103JV PB(F)
U03AS MAIN (PE0630)		R1742	75009850	RESISTOR, CHIP (1005), CR1/16S 103JV PB(F)
U03AS MAIN (PE0630)		R1743	75009850	RESISTOR, CHIP (1005), CR1/16S 103JV PB(F)
U03AS MAIN (PE0630)		R1744	75009850	RESISTOR, CHIP (1005), CR1/16S 103JV PB(F)
U03AS MAIN (PE0630)		R1747	75009850	RESISTOR, CHIP (1005), CR1/16S 103JV PB(F)
U03AS MAIN (PE0630)		R1748	75009850	RESISTOR, CHIP (1005), CR1/16S 103JV PB(F)
U03AS MAIN (PE0630)		R1751	75007601	RESISTOR, CHIP(1005), CR1/16S 473JV PB(F)
U03AS MAIN (PE0630)		R2100	75007588	RESISTOR, CHIP(2012), CR1/10 750JV PB(F)
U03AS MAIN (PE0630)		R2101	75007588	RESISTOR, CHIP(2012), CR1/10 750JV PB(F)
U03AS MAIN (PE0630)		R2102	75007588	RESISTOR, CHIP(2012), CR1/10 750JV PB(F)
U03AS MAIN (PE0630)		R2103	75007588	RESISTOR, CHIP(2012), CR1/10 750JV PB(F)
U03AS MAIN (PE0630)		R2105	75007587	RESISTOR, CHIP(2012), CR1/10 151JV PB(F)
U03AS MAIN (PE0630)		R2106	75007587	RESISTOR, CHIP(2012), CR1/10 151JV PB(F)
U03AS MAIN (PE0630)		R2107	75009836	JUMPER, CHIP 1005TYPE, CR1/16S 000V PB(F)
U03AS MAIN (PE0630)		R2109	75007601	RESISTOR, CHIP(1005), CR1/16S 473JV PB(F)
U03AS MAIN (PE0630)		R2136	75009848	RESISTOR, CHIP (1005), CR1/16S 104JV PB(F)
U03AS MAIN (PE0630)		R2137	75009848	RESISTOR, CHIP (1005), CR1/16S 104JV PB(F)
U03AS MAIN (PE0630)		R2139	75007601	RESISTOR, CHIP(1005), CR1/16S 473JV PB(F)
U03AS MAIN (PE0630)		R2140	75007601	RESISTOR, CHIP(1005), CR1/16S 473JV PB(F)
U03AS MAIN (PE0630)		R2141	75007598	RESISTOR, CHIP(1005), CR1/16S 681JV PB(F)
U03AS MAIN (PE0630)		R2142	75007598	RESISTOR, CHIP(1005), CR1/16S 681JV PB(F)
U03AS MAIN (PE0630)		R2143	75007601	RESISTOR, CHIP(1005), CR1/16S 473JV PB(F)
U03AS MAIN (PE0630)		R2144	75007601	RESISTOR, CHIP(1005), CR1/16S 473JV PB(F)
U03AS MAIN (PE0630)		R2145	75007598	RESISTOR, CHIP(1005), CR1/16S 681JV PB(F)
U03AS MAIN (PE0630)		R2146	75007598	RESISTOR, CHIP(1005), CR1/16S 681JV PB(F)
U03AS MAIN (PE0630)		R2148	75009847	RESISTOR, CHIP (1005), CR1/16S 472JV PB(F)
U03AS MAIN (PE0630)		R2200	75007588	RESISTOR, CHIP(2012), CR1/10 750JV PB(F)
U03AS MAIN (PE0630)		R2201	75007588	RESISTOR, CHIP(2012), CR1/10 750JV PB(F)
U03AS MAIN (PE0630)		R2214	75009848	RESISTOR, CHIP (1005), CR1/16S 104JV PB(F)
U03AS MAIN (PE0630)		R2215	75009848	RESISTOR, CHIP (1005), CR1/16S 104JV PB(F)
U03AS MAIN (PE0630)		R2216	75007601	RESISTOR, CHIP(1005), CR1/16S 473JV PB(F)
U03AS MAIN (PE0630)		R2217	75007601	RESISTOR, CHIP(1005), CR1/16S 473JV PB(F)
U03AS MAIN (PE0630)		R2218	75007598	RESISTOR, CHIP(1005), CR1/16S 681JV PB(F)
U03AS MAIN (PE0630)		R2219	75007598	RESISTOR, CHIP(1005), CR1/16S 681JV PB(F)
U03AS MAIN (PE0630)		R2220	75007601	RESISTOR, CHIP(1005), CR1/16S 473JV PB(F)
U03AS MAIN (PE0630)		R2222	75007598	RESISTOR, CHIP(1005), CR1/16S 681JV PB(F)
U03AS MAIN (PE0630)		R2223	75007598	RESISTOR, CHIP(1005), CR1/16S 681JV PB(F)
U03AS MAIN (PE0630)		R2225	75009850	RESISTOR, CHIP (1005), CR1/16S 103JV PB(F)
U03AS MAIN (PE0630)		R2226	75009850	RESISTOR, CHIP (1005), CR1/16S 103JV PB(F)
U03AS MAIN (PE0630)		R2401	75007588	RESISTOR, CHIP(2012), CR1/10 750JV PB(F)
U03AS MAIN (PE0630)		R2402	75007588	RESISTOR, CHIP(2012), CR1/10 750JV PB(F)
U03AS MAIN (PE0630)		R2403	75007588	RESISTOR, CHIP(2012), CR1/10 750JV PB(F)
U03AS MAIN (PE0630)		R2404	75007588	RESISTOR, CHIP(2012), CR1/10 750JV PB(F)
U03AS MAIN (PE0630)		R2411	75008336	RESISTOR, CHIP(1005), CR1/16S 102JV PB(F)

U03AS MAIN (PE0630)		R2412	75008336	RESISTOR, CHIP(1005), CR1/16S 102JV PB(F)
U03AS MAIN (PE0630)		R2413	75008336	RESISTOR, CHIP(1005), CR1/16S 102JV PB(F)
U03AS MAIN (PE0630)		R2414	75008336	RESISTOR, CHIP(1005), CR1/16S 102JV PB(F)
U03AS MAIN (PE0630)		R2415	75008336	RESISTOR, CHIP(1005), CR1/16S 102JV PB(F)
U03AS MAIN (PE0630)		R2416	75008336	RESISTOR, CHIP(1005), CR1/16S 102JV PB(F)
U03AS MAIN (PE0630)		R2707	75009830	RESISTOR, CHIP (1005), CR1/16S 750JV PB(F)
U03AS MAIN (PE0630)		R2710	75009847	RESISTOR, CHIP (1005), CR1/16S 472JV PB(F)
U03AS MAIN (PE0630)		R2711	75009844	RESISTOR, CHIP (1005), CR1/16S 101JV PB(F)
U03AS MAIN (PE0630)		R2713	75009851	JUMPER, CHIP 1005TYPE, CR1/16S 000V PB(F)
U03AS MAIN (PE0630)		R2715	75009834	RESISTOR, CHIP (1005), CR1/16S 103JV PB(F)
U03AS MAIN (PE0630)		R2716	75009830	RESISTOR, CHIP (1005), CR1/16S 750JV PB(F)
U03AS MAIN (PE0630)		R2741	75009844	RESISTOR, CHIP (1005), CR1/16S 101JV PB(F)
U03AS MAIN (PE0630)		R2742	75009847	RESISTOR, CHIP (1005), CR1/16S 472JV PB(F)
U03AS MAIN (PE0630)		R2743	75009851	JUMPER, CHIP 1005TYPE, CR1/16S 000V PB(F)
U03AS MAIN (PE0630)		R2745	75009834	RESISTOR, CHIP (1005), CR1/16S 103JV PB(F)
U03AS MAIN (PE0630)		R2808	75009844	RESISTOR, CHIP (1005), CR1/16S 101JV PB(F)
U03AS MAIN (PE0630)		R2809	75007599	RESISTOR, CHIP(1005), CR1/16S 222JV PB(F)
U03AS MAIN (PE0630)		R2811	75007597	RESISTOR, CHIP(1005), CR1/16S 474JV PB(F)
U03AS MAIN (PE0630)		R2812	75009834	RESISTOR, CHIP (1005), CR1/16S 103JV PB(F)
U03AS MAIN (PE0630)		R2843	75009847	RESISTOR, CHIP (1005), CR1/16S 472JV PB(F)
U03AS MAIN (PE0630)		R2844	75009834	RESISTOR, CHIP (1005), CR1/16S 103JV PB(F)
U03AS MAIN (PE0630)		R2845	75005998	RESISTOR, CHIP (1005), CR1/16S 333JV PB(F)
U03AS MAIN (PE0630)		R2846	75007600	RESISTOR, CHIP(1005), CR1/16S 223JV PB(F)
U03AS MAIN (PE0630)		R2847	75007601	RESISTOR, CHIP(1005), CR1/16S 473JV PB(F)
U03AS MAIN (PE0630)		R2848	75007601	RESISTOR, CHIP(1005), CR1/16S 473JV PB(F)
U03AS MAIN (PE0630)		R2849	75007601	RESISTOR, CHIP(1005), CR1/16S 473JV PB(F)
U03AS MAIN (PE0630)		R2850	75009830	RESISTOR, CHIP (1005), CR1/16S 750JV PB(F)
U03AS MAIN (PE0630)		R2900	75009834	RESISTOR, CHIP (1005), CR1/16S 103JV PB(F)
U03AS MAIN (PE0630)		R2901	75005986	RESISTOR, CHIP (1005), CR1/16S 183JV PB(F)
U03AS MAIN (PE0630)		R2902	75009834	RESISTOR, CHIP (1005), CR1/16S 103JV PB(F)
U03AS MAIN (PE0630)		R2903	75005986	RESISTOR, CHIP (1005), CR1/16S 183JV PB(F)
U03AS MAIN (PE0630)		R2904	75009834	RESISTOR, CHIP (1005), CR1/16S 103JV PB(F)
U03AS MAIN (PE0630)		R2905	75005986	RESISTOR, CHIP (1005), CR1/16S 183JV PB(F)
U03AS MAIN (PE0630)		R2906	75005986	RESISTOR, CHIP (1005), CR1/16S 183JV PB(F)
U03AS MAIN (PE0630)		R2907	75009834	RESISTOR, CHIP (1005), CR1/16S 103JV PB(F)
U03AS MAIN (PE0630)		R3000	75010138	RESISTOR, CHIP (1608), CR1/16 472JV PB(F)
U03AS MAIN (PE0630)		R3002	75010138	RESISTOR, CHIP (1608), CR1/16 472JV PB(F)
U03AS MAIN (PE0630)		R3006	75008336	RESISTOR, CHIP(1005), CR1/16S 102JV PB(F)
U03AS MAIN (PE0630)		R3008	75008330	RESISTOR, CHIP(1005), CR1/16S 472FV PB(F)
U03AS MAIN (PE0630)		R3009	75008336	RESISTOR, CHIP(1005), CR1/16S 102JV PB(F)
U03AS MAIN (PE0630)		R3010	75010142	RESISTOR, CHIP (1608), CR1/16 472JV PB(F)
U03AS MAIN (PE0630)		R3011	75007601	RESISTOR, CHIP(1005), CR1/16S 473JV PB(F)
U03AS MAIN (PE0630)		R3013	75010142	RESISTOR, CHIP (1608), CR1/16 472JV PB(F)
U03AS MAIN (PE0630)		R3014	75007601	RESISTOR, CHIP(1005), CR1/16S 473JV PB(F)
U03AS MAIN (PE0630)		R3015	75008336	RESISTOR, CHIP(1005), CR1/16S 102JV PB(F)
U03AS MAIN (PE0630)		R3017	75008336	RESISTOR, CHIP(1005), CR1/16S 102JV PB(F)
U03AS MAIN (PE0630)		R3019	75008336	RESISTOR, CHIP(1005), CR1/16S 102JV PB(F)

U03AS MAIN (PE0630)		R3022	75007601	RESISTOR, CHIP(1005), CR1/16S 473JV PB(F)
U03AS MAIN (PE0630)		R3028	75007601	RESISTOR, CHIP(1005), CR1/16S 473JV PB(F)
U03AS MAIN (PE0630)		R3500	75008336	RESISTOR, CHIP(1005), CR1/16S 102JV PB(F)
U03AS MAIN (PE0630)		R3501	75009847	RESISTOR, CHIP (1005), CR1/16S 472JV PB(F)
U03AS MAIN (PE0630)		R3502	75009850	RESISTOR, CHIP (1005), CR1/16S 103JV PB(F)
U03AS MAIN (PE0630)		R3504	75008336	RESISTOR, CHIP(1005), CR1/16S 102JV PB(F)
U03AS MAIN (PE0630)		R3505	75009847	RESISTOR, CHIP (1005), CR1/16S 472JV PB(F)
U03AS MAIN (PE0630)		R3506	75009850	RESISTOR, CHIP (1005), CR1/16S 103JV PB(F)
U03AS MAIN (PE0630)		R3511	75007601	RESISTOR, CHIP(1005), CR1/16S 473JV PB(F)
U03AS MAIN (PE0630)		R3512	75005805	RESISTOR, CHIP, 1005 CR1/16S 224JV PB(F)
U03AS MAIN (PE0630)		R6000	75005804	RESISTOR, CHIP, 1005 CR1/16S 153JV PB(F)
U03AS MAIN (PE0630)		R6001	75005804	RESISTOR, CHIP, 1005 CR1/16S 153JV PB(F)
U03AS MAIN (PE0630)		R6002	75005985	RESISTOR, CHIP (1005), CR1/16S 332JV PB(F)
U03AS MAIN (PE0630)		R6003	75007600	RESISTOR, CHIP(1005), CR1/16S 223JV PB(F)
U03AS MAIN (PE0630)		R6004	75007600	RESISTOR, CHIP(1005), CR1/16S 223JV PB(F)
U03AS MAIN (PE0630)		R6005	75007601	RESISTOR, CHIP(1005), CR1/16S 473JV PB(F)
U03AS MAIN (PE0630)		R6006	75007601	RESISTOR, CHIP(1005), CR1/16S 473JV PB(F)
U03AS MAIN (PE0630)		R6028	75009844	RESISTOR, CHIP (1005), CR1/16S 101JV PB(F)
U03AS MAIN (PE0630)		R6029	75009844	RESISTOR, CHIP (1005), CR1/16S 101JV PB(F)
U03AS MAIN (PE0630)		R6030	75007601	RESISTOR, CHIP(1005), CR1/16S 473JV PB(F)
U03AS MAIN (PE0630)		R6031	75007601	RESISTOR, CHIP(1005), CR1/16S 473JV PB(F)
U03AS MAIN (PE0630)		R6032	75007601	RESISTOR, CHIP(1005), CR1/16S 473JV PB(F)
U03AS MAIN (PE0630)		R6033	75007600	RESISTOR, CHIP(1005), CR1/16S 223JV PB(F)
U03AS MAIN (PE0630)		R6060	75005985	RESISTOR, CHIP (1005), CR1/16S 332JV PB(F)
U03AS MAIN (PE0630)		R6062	75005804	RESISTOR, CHIP, 1005 CR1/16S 153JV PB(F)
U03AS MAIN (PE0630)		R6063	75005804	RESISTOR, CHIP, 1005 CR1/16S 153JV PB(F)
U03AS MAIN (PE0630)		R6065	75007601	RESISTOR, CHIP(1005), CR1/16S 473JV PB(F)
U03AS MAIN (PE0630)		R6067	75007601	RESISTOR, CHIP(1005), CR1/16S 473JV PB(F)
U03AS MAIN (PE0630)		R6078	75007600	RESISTOR, CHIP(1005), CR1/16S 223JV PB(F)
U03AS MAIN (PE0630)		R6079	75007600	RESISTOR, CHIP(1005), CR1/16S 223JV PB(F)
U03AS MAIN (PE0630)		R6101	75012544	RESISTOR, CHIP(3216), CR1/8 221FV PB(F)
U03AS MAIN (PE0630)		R6102	75009448	RESISTOR, CHIP (3216), CR1/8 6R8FV PB(F)
U03AS MAIN (PE0630)		R6103	75009448	RESISTOR, CHIP (3216), CR1/8 6R8FV PB(F)
U03AS MAIN (PE0630)		R6104	75012544	RESISTOR, CHIP(3216), CR1/8 221FV PB(F)
U03AS MAIN (PE0630)		R6105	75009448	RESISTOR, CHIP (3216), CR1/8 6R8FV PB(F)
U03AS MAIN (PE0630)		R6106	75009448	RESISTOR, CHIP (3216), CR1/8 6R8FV PB(F)
U03AS MAIN (PE0630)		R6107	75007600	RESISTOR, CHIP(1005), CR1/16S 223JV PB(F)
U03AS MAIN (PE0630)		R6108	75007599	RESISTOR, CHIP(1005), CR1/16S 222JV PB(F)
U03AS MAIN (PE0630)		R6109	75009844	RESISTOR, CHIP (1005), CR1/16S 101JV PB(F)
U03AS MAIN (PE0630)		R6110	75009844	RESISTOR, CHIP (1005), CR1/16S 101JV PB(F)
U03AS MAIN (PE0630)		R6111	75007600	RESISTOR, CHIP(1005), CR1/16S 223JV PB(F)
U03AS MAIN (PE0630)		R6112	75009834	RESISTOR, CHIP (1005), CR1/16S 103JV PB(F)
U03AS MAIN (PE0630)		R6113	75009844	RESISTOR, CHIP (1005), CR1/16S 101JV PB(F)
U03AS MAIN (PE0630)		R6114	75009844	RESISTOR, CHIP (1005), CR1/16S 101JV PB(F)
U03AS MAIN (PE0630)		R6115	75009844	RESISTOR, CHIP (1005), CR1/16S 101JV PB(F)
U03AS MAIN (PE0630)		R6116	75009844	RESISTOR, CHIP (1005), CR1/16S 101JV PB(F)
U03AS MAIN (PE0630)		R6117	75010703	RESISTOR, CHIP (1005), CR1/16S 622FV PB(F)

U03AS MAIN (PE0630)		R6118	75009851	JUMPER, CHIP 1005TYPE, CR1/16S 000V PB(F)
U03AS MAIN (PE0630)		R6119	75009851	JUMPER, CHIP 1005TYPE, CR1/16S 000V PB(F)
U03AS MAIN (PE0630)		R6151	75010698	RESISTOR, CHIP (3216), ERJ8ENF75R0V
U03AS MAIN (PE0630)		R6152	75010698	RESISTOR, CHIP (3216), ERJ8ENF75R0V
U03AS MAIN (PE0630)		R6154	75010698	RESISTOR, CHIP (3216), ERJ8ENF75R0V
U03AS MAIN (PE0630)		R6155	75010698	RESISTOR, CHIP (3216), ERJ8ENF75R0V
U03AS MAIN (PE0630)		R6301	75009836	JUMPER, CHIP 1005TYPE, CR1/16S 000V PB(F)
U03AS MAIN (PE0630)		R6302	75007599	RESISTOR, CHIP(1005), CR1/16S 222JV PB(F)
U03AS MAIN (PE0630)		R6304	75007600	RESISTOR, CHIP(1005), CR1/16S 223JV PB(F)
U03AS MAIN (PE0630)		R6305	75009840	RESISTOR, CHIP (1005), CR1/16S 102JV PB(F)
U03AS MAIN (PE0630)		R6306	75009848	RESISTOR, CHIP (1005), CR1/16S 104JV PB(F)
U03AS MAIN (PE0630)		R6307	75009848	RESISTOR, CHIP (1005), CR1/16S 104JV PB(F)
U03AS MAIN (PE0630)		R6308	75007600	RESISTOR, CHIP(1005), CR1/16S 223JV PB(F)
U03AS MAIN (PE0630)		R6309	75009834	RESISTOR, CHIP (1005), CR1/16S 103JV PB(F)
U03AS MAIN (PE0630)		R6310	75007601	RESISTOR, CHIP(1005), CR1/16S 473JV PB(F)
U03AS MAIN (PE0630)		R6311	75009834	RESISTOR, CHIP (1005), CR1/16S 103JV PB(F)
U03AS MAIN (PE0630)		R6312	75007600	RESISTOR, CHIP(1005), CR1/16S 223JV PB(F)
U03AS MAIN (PE0630)		R6313	75009848	RESISTOR, CHIP (1005), CR1/16S 104JV PB(F)
U03AS MAIN (PE0630)		R6314	75009840	RESISTOR, CHIP (1005), CR1/16S 102JV PB(F)
U03AS MAIN (PE0630)		R6315	75009834	RESISTOR, CHIP (1005), CR1/16S 103JV PB(F)
U03AS MAIN (PE0630)		R6316	75009840	RESISTOR, CHIP (1005), CR1/16S 102JV PB(F)
U03AS MAIN (PE0630)		R6317	75009834	RESISTOR, CHIP (1005), CR1/16S 103JV PB(F)
U03AS MAIN (PE0630)		R6401	75009847	RESISTOR, CHIP (1005), CR1/16S 472JV PB(F)
U03AS MAIN (PE0630)		R6402	75009847	RESISTOR, CHIP (1005), CR1/16S 472JV PB(F)
U03AS MAIN (PE0630)		R6403	75006537	RESISTOR, CHIP (1005), CR1/16S 203JV PB(F)
U03AS MAIN (PE0630)		R6404	75006537	RESISTOR, CHIP (1005), CR1/16S 203JV PB(F)
U03AS MAIN (PE0630)		R6405	75009834	RESISTOR, CHIP (1005), CR1/16S 103JV PB(F)
U03AS MAIN (PE0630)		R6406	75009834	RESISTOR, CHIP (1005), CR1/16S 103JV PB(F)
U03AS MAIN (PE0630)		R6407	75009834	RESISTOR, CHIP (1005), CR1/16S 103JV PB(F)
U03AS MAIN (PE0630)		R6408	75007601	RESISTOR, CHIP(1005), CR1/16S 473JV PB(F)
U03AS MAIN (PE0630)		R6409	75009848	RESISTOR, CHIP (1005), CR1/16S 104JV PB(F)
U03AS MAIN (PE0630)		R7001	75009849	RESISTOR, CHIP (1005), CR1/16S 101JV PB(F)
U03AS MAIN (PE0630)		R7002	75009849	RESISTOR, CHIP (1005), CR1/16S 101JV PB(F)
U03AS MAIN (PE0630)		R7003	75009848	RESISTOR, CHIP (1005), CR1/16S 104JV PB(F)
U03AS MAIN (PE0630)		R7004	75009848	RESISTOR, CHIP (1005), CR1/16S 104JV PB(F)
U03AS MAIN (PE0630)		R7006	75009848	RESISTOR, CHIP (1005), CR1/16S 104JV PB(F)
U03AS MAIN (PE0630)		R7007	75009850	RESISTOR, CHIP (1005), CR1/16S 103JV PB(F)
U03AS MAIN (PE0630)		R7008	75009850	RESISTOR, CHIP (1005), CR1/16S 103JV PB(F)
U03AS MAIN (PE0630)		R7011	75008670	RESISTOR, CHIP (1005), CR1/16S 163FV PB(F)
U03AS MAIN (PE0630)		R7012	75005987	RESISTOR, CHIP (1005), CR1/16S 201JV PB(F)
U03AS MAIN (PE0630)		R7013	75009842	RESISTOR, CHIP (1005), CR1/16S 330JV PB(F)
U03AS MAIN (PE0630)		R7014	75009842	RESISTOR, CHIP (1005), CR1/16S 330JV PB(F)
U03AS MAIN (PE0630)		R7015	75009842	RESISTOR, CHIP (1005), CR1/16S 330JV PB(F)
U03AS MAIN (PE0630)		R7016	75009842	RESISTOR, CHIP (1005), CR1/16S 330JV PB(F)
U03AS MAIN (PE0630)		R7017	75009842	RESISTOR, CHIP (1005), CR1/16S 330JV PB(F)
U03AS MAIN (PE0630)		R8000	75009851	JUMPER, CHIP 1005TYPE, CR1/16S 000V PB(F)
U03AS MAIN (PE0630)		R8001	75009851	JUMPER, CHIP 1005TYPE, CR1/16S 000V PB(F)

U03AS MAIN (PE0630)		R8002	75009851	JUMPER, CHIP 1005TYPE, CR1/16S 000V PB(F)
U03AS MAIN (PE0630)		R8003	75009851	JUMPER, CHIP 1005TYPE, CR1/16S 000V PB(F)
U03AS MAIN (PE0630)		R8004	75009916	RESISTOR, CHIP (1005), CR1/16S 183DV PB(F)
U03AS MAIN (PE0630)		R8005	75008335	RESISTOR, CHIP(1005), CR1/16S 103DV PB(F)
U03AS MAIN (PE0630)		R8006	75009847	RESISTOR, CHIP (1005), CR1/16S 472JV PB(F)
U03AS MAIN (PE0630)		R8007	75009847	RESISTOR, CHIP (1005), CR1/16S 472JV PB(F)
U03AS MAIN (PE0630)		R8009	75010143	CHIP JUMPER, 1608TYPE, CR1/16 000V PB(F)
U03AS MAIN (PE0630)		R8010	75007986	RESISTOR, CHIP(1005), CR1/16S 681DV PB(F)
U03AS MAIN (PE0630)		R8011	75010143	CHIP JUMPER, 1608TYPE, CR1/16 000V PB(F)
U03AS MAIN (PE0630)		R8013	75010143	CHIP JUMPER, 1608TYPE, CR1/16 000V PB(F)
U03AS MAIN (PE0630)		R8014	75007985	RESISTOR, CHIP(1005), CR1/16S 151DV PB(F)
U03AS MAIN (PE0630)		R8015	75009851	JUMPER, CHIP 1005TYPE, CR1/16S 000V PB(F)
U03AS MAIN (PE0630)		R8016	75009851	JUMPER, CHIP 1005TYPE, CR1/16S 000V PB(F)
U03AS MAIN (PE0630)		R8017	75009842	RESISTOR, CHIP (1005), CR1/16S 330JV PB(F)
U03AS MAIN (PE0630)		R8018	75009834	RESISTOR, CHIP (1005), CR1/16S 103JV PB(F)
U03AS MAIN (PE0630)		R8019	75009850	RESISTOR, CHIP (1005), CR1/16S 103JV PB(F)
U03AS MAIN (PE0630)		R8020	75009842	RESISTOR, CHIP (1005), CR1/16S 330JV PB(F)
U03AS MAIN (PE0630)		R8022	75008336	RESISTOR, CHIP(1005), CR1/16S 102JV PB(F)
U03AS MAIN (PE0630)		R8023	75009842	RESISTOR, CHIP (1005), CR1/16S 330JV PB(F)
U03AS MAIN (PE0630)		R8503	75009844	RESISTOR, CHIP (1005), CR1/16S 101JV PB(F)
U03AS MAIN (PE0630)		R8504	75009844	RESISTOR, CHIP (1005), CR1/16S 101JV PB(F)
U03AS MAIN (PE0630)		R8506	75009844	RESISTOR, CHIP (1005), CR1/16S 101JV PB(F)
U03AS MAIN (PE0630)		R8507	75009834	RESISTOR, CHIP (1005), CR1/16S 103JV PB(F)
U03AS MAIN (PE0630)		R8508	75007590	RESISTOR, CHIP(1005), CR1/16S 273JV PB(F)
U03AS MAIN (PE0630)		R8509	75009836	JUMPER, CHIP 1005TYPE, CR1/16S 000V PB(F)
U03AS MAIN (PE0630)		R8510	75010701	RESISTOR, CHIP (1005), CR1/16S 302JV PB(F)
U03AS MAIN (PE0630)		R8511	75009846	RESISTOR, CHIP (1005), CR1/16S 152JV PB(F)
U03AS MAIN (PE0630)		R8512	75010706	RESISTOR, CHIP (1005), ERJ2GEJ510X
U03AS MAIN (PE0630)		R8514	75009836	JUMPER, CHIP 1005TYPE, CR1/16S 000V PB(F)
U03AS MAIN (PE0630)		R8515	75010701	RESISTOR, CHIP (1005), CR1/16S 302JV PB(F)
U03AS MAIN (PE0630)		R8516	75009846	RESISTOR, CHIP (1005), CR1/16S 152JV PB(F)
U03AS MAIN (PE0630)		R8517	75010706	RESISTOR, CHIP (1005), ERJ2GEJ510X
U03AS MAIN (PE0630)		R8525	75009836	JUMPER, CHIP 1005TYPE, CR1/16S 000V PB(F)
U03AS MAIN (PE0630)		R9017	75009851	JUMPER, CHIP 1005TYPE, CR1/16S 000V PB(F)
U03AS MAIN (PE0630)		R9208	75009834	RESISTOR, CHIP (1005), CR1/16S 103JV PB(F)
U03AS MAIN (PE0630)		R9209	75009847	RESISTOR, CHIP (1005), CR1/16S 472JV PB(F)
U03AS MAIN (PE0630)		R9211	75009840	RESISTOR, CHIP (1005), CR1/16S 102JV PB(F)
U03AS MAIN (PE0630)		R9212	75009842	RESISTOR, CHIP (1005), CR1/16S 330JV PB(F)
U03AS MAIN (PE0630)		R9214	75009844	RESISTOR, CHIP (1005), CR1/16S 101JV PB(F)
U03AS MAIN (PE0630)		R9500	75005985	RESISTOR, CHIP (1005), CR1/16S 332JV PB(F)
U03AS MAIN (PE0630)		R9501	75005985	RESISTOR, CHIP (1005), CR1/16S 332JV PB(F)
U03AS MAIN (PE0630)		R9502	75009850	RESISTOR, CHIP (1005), CR1/16S 103JV PB(F)
U03AS MAIN (PE0630)		R9503	75009844	RESISTOR, CHIP (1005), CR1/16S 101JV PB(F)
U03AS MAIN (PE0630)		R9504	75012551	RESISTOR, CHIP(1608), ERJ3GEYJ243V
U03AS MAIN (PE0630)		R9505	75009851	JUMPER, CHIP 1005TYPE, CR1/16S 000V PB(F)
U03AS MAIN (PE0630)		R9506	75012546	RESISTOR, CHIP(1608), CR1/16 362FV PB(F)
U03AS MAIN (PE0630)		R9507	75012545	RESISTOR, CHIP(1608), ERJ3GEYF243V

U03AS MAIN (PE0630)		R9508	75009832	RESISTOR, CHIP (1005), CR1/16S 103FV PB(F)
U03AS MAIN (PE0630)		R9511	75009832	RESISTOR, CHIP (1005), CR1/16S 103FV PB(F)
U03AS MAIN (PE0630)		R9512	75012547	RESISTOR, CHIP(1005), CR1/16S 750FV PB(F)
U03AS MAIN (PE0630)		R9513	75008013	RESISTOR, CHIP(1005), CR1/16S 101FV PB(F)
U03AS MAIN (PE0630)		R9514	75011116	RESISTOR, CHIP (1005), CR1/16S 392FV PB(F)
U03AS MAIN (PE0630)		R9515	75011076	RESISTOR, CHIP (1005), CR1/16S 682DV PB(F)
U03AS MAIN (PE0630)		R9516	75009844	RESISTOR, CHIP (1005), CR1/16S 101JV PB(F)
U03AS MAIN (PE0630)		R9517	75009850	RESISTOR, CHIP (1005), CR1/16S 103JV PB(F)
U03AS MAIN (PE0630)		R9518	75008533	RESISTOR, CHIP(1005), CR1/16S 102DV PB(F)
U03AS MAIN (PE0630)		R9519	75008533	RESISTOR, CHIP(1005), CR1/16S 102DV PB(F)
U03AS MAIN (PE0630)		R9520	75008533	RESISTOR, CHIP(1005), CR1/16S 102DV PB(F)
U03AS MAIN (PE0630)		R9521	75008533	RESISTOR, CHIP(1005), CR1/16S 102DV PB(F)
U03AS MAIN (PE0630)		R9524	75009850	RESISTOR, CHIP (1005), CR1/16S 103JV PB(F)
U03AS MAIN (PE0630)		R9525	75009851	JUMPER, CHIP 1005TYPE, CR1/16S 000V PB(F)
U03AS MAIN (PE0630)		R9601	75008335	RESISTOR, CHIP(1005), CR1/16S 103DV PB(F)
U03AS MAIN (PE0630)		R9602	75011074	RESISTOR, CHIP (1005), CR1/16S 473DV PB(F)
U03AS MAIN (PE0630)		R9603	75005996	RESISTOR, CHIP (1005), CR1/16S 682DV PB(F)
U03AS MAIN (PE0630)		R9605	75011075	RESISTOR, CHIP (1005), CR1/16S 104DV PB(F)
U03AS MAIN (PE0630)		R9606	75011075	RESISTOR, CHIP (1005), CR1/16S 104DV PB(F)
U03AS MAIN (PE0630)		R9607	75012278	RESISTOR, CHIP (1005), CR1/16S 512DV PB(F)
U03AS MAIN (PE0630)		R9608	75011075	RESISTOR, CHIP (1005), CR1/16S 104DV PB(F)
U03AS MAIN (PE0630)		R9611	75010857	RESISTOR, CHIP (1005), CR1/16S 124DV PB(F)
U03AS MAIN (PE0630)		R9612	75008335	RESISTOR, CHIP(1005), CR1/16S 103DV PB(F)
U03AS MAIN (PE0630)		R9613	75008335	RESISTOR, CHIP(1005), CR1/16S 103DV PB(F)
U03AS MAIN (PE0630)		R9614	75010852	RESISTOR, CHIP (1005), CR1/16S 333DV PB(F)
U03AS MAIN (PE0630)		R9615	75010862	RESISTOR, CHIP (1005), CR1/16S 274DV PB(F)
U03AS MAIN (PE0630)		R9637	75010850	RESISTOR, CHIP (1005), CR1/16S 223DV PB(F)
U03AS MAIN (PE0630)		R9638	75011074	RESISTOR, CHIP (1005), CR1/16S 473DV PB(F)
U03AS MAIN (PE0630)		R9639	75007989	RESISTOR, CHIP(1005), ERJ2RKD224X
U03AS MAIN (PE0630)		R9640	75010705	RESISTOR, CHIP (1005), CR1/16S 332DV PB(F)
U03AS MAIN (PE0630)		R9641	75008335	RESISTOR, CHIP(1005), CR1/16S 103DV PB(F)
U03AS MAIN (PE0630)		RM160	75009917	RESISTOR, NETWORK, CHIP (1005X4), CRA108
U03AS MAIN (PE0630)		RM161	75009917	RESISTOR, NETWORK, CHIP (1005X4), CRA108
U03AS MAIN (PE0630)		RM162	75009917	RESISTOR, NETWORK, CHIP (1005X4), CRA108
U03AS MAIN (PE0630)		RM163	75009917	RESISTOR, NETWORK, CHIP (1005X4), CRA108
U03AS MAIN (PE0630)		RM164	75009917	RESISTOR, NETWORK, CHIP (1005X4), CRA108
U03AS MAIN (PE0630)		RM165	75009917	RESISTOR, NETWORK, CHIP (1005X4), CRA108
U03AS MAIN (PE0630)		RM166	75009917	RESISTOR, NETWORK, CHIP (1005X4), CRA108
U03AS MAIN (PE0630)		RM701	75009839	RESISTOR, NETWORK CHIP (1005X4), CRA1083
U03AS MAIN (PE0630)		RM702	75009839	RESISTOR, NETWORK CHIP (1005X4), CRA1083
U03AS MAIN (PE0630)		RM703	75009839	RESISTOR, NETWORK CHIP (1005X4), CRA1083
U03AS MAIN (PE0630)		RM704	75009839	RESISTOR, NETWORK CHIP (1005X4), CRA1083
U03AS MAIN (PE0630)		RM705	75009839	RESISTOR, NETWORK CHIP (1005X4), CRA1083
U03AS MAIN (PE0630)		RM706	75009839	RESISTOR, NETWORK CHIP (1005X4), CRA1083
U03AS MAIN (PE0630)		RM707	75009828	RESISTOR, CHIP NETWORK (1005X4), CRA1082
U03AS MAIN (PE0630)		RM708	75009828	RESISTOR, CHIP NETWORK (1005X4), CRA1082
U03AS MAIN (PE0630)		RM709	75009828	RESISTOR, CHIP NETWORK (1005X4), CRA1082

U03AS MAIN (PE0630)		RM710	75009828	RESISTOR, CHIP NETWORK (1005X4), CRA1082
U03AS MAIN (PE0630)		RM711	75009828	RESISTOR, CHIP NETWORK (1005X4), CRA1082
U03AS MAIN (PE0630)		RM712	75009828	RESISTOR, CHIP NETWORK (1005X4), CRA1082
U03AS MAIN (PE0630)		RM713	75009921	RESISTOR, NETWORK, CHIP (1005X4), CRA108
U03AS MAIN (PE0630)		RM714	75009921	RESISTOR, NETWORK, CHIP (1005X4), CRA108
U03AS MAIN (PE0630)		RM715	75009917	RESISTOR, NETWORK, CHIP (1005X4), CRA108
U03AS MAIN (PE0630)		RM716	75009917	RESISTOR, NETWORK, CHIP (1005X4), CRA108
U03AS MAIN (PE0630)		RM717	75009917	RESISTOR, NETWORK, CHIP (1005X4), CRA108
U03AS MAIN (PE0630)		RM718	75009917	RESISTOR, NETWORK, CHIP (1005X4), CRA108
U03AS MAIN (PE0630)		RM800	75009921	RESISTOR, NETWORK, CHIP (1005X4), CRA108
U03AS MAIN (PE0630)		RM801	75009921	RESISTOR, NETWORK, CHIP (1005X4), CRA108
U03AS MAIN (PE0630)		RV200	75008678	VARISTOR, EZJZ0V270RA
U03AS MAIN (PE0630)		RV201	75008678	VARISTOR, EZJZ0V270RA
U03AS MAIN (PE0630)		RV202	75008678	VARISTOR, EZJZ0V270RA
U03AS MAIN (PE0630)		RV203	75008678	VARISTOR, EZJZ0V270RA
U03AS MAIN (PE0630)		RV204	75008678	VARISTOR, EZJZ0V270RA
U03AS MAIN (PE0630)		RV206	75008678	VARISTOR, EZJZ0V270RA
U03AS MAIN (PE0630)		RV207	75008678	VARISTOR, EZJZ0V270RA
U03AS MAIN (PE0630)		RV209	75008678	VARISTOR, EZJZ0V270RA
U03AS MAIN (PE0630)		RV210	75008678	VARISTOR, EZJZ0V270RA
U03AS MAIN (PE0630)		RV213	75008678	VARISTOR, EZJZ0V270RA
U03AS MAIN (PE0630)		RV214	75008678	VARISTOR, EZJZ0V270RA
U03AS MAIN (PE0630)		RV215	75008678	VARISTOR, EZJZ0V270RA
U03AS MAIN (PE0630)		RV500	75008678	VARISTOR, EZJZ0V270RA
U03AS MAIN (PE0630)		RV501	75008678	VARISTOR, EZJZ0V270RA
U03AS MAIN (PE0630)		RV502	75008678	VARISTOR, EZJZ0V270RA
U03AS MAIN (PE0630)		RV503	75008678	VARISTOR, EZJZ0V270RA
U03AS MAIN (PE0630)		W1001	75009836	JUMPER, CHIP 1005TYPE, CR1/16S 000V PB(F)
U03AS MAIN (PE0630)		W1100	75009836	JUMPER, CHIP 1005TYPE, CR1/16S 000V PB(F)
U03AS MAIN (PE0630)		W1101	75009836	JUMPER, CHIP 1005TYPE, CR1/16S 000V PB(F)
U03AS MAIN (PE0630)		W1201	75009837	JUMPER, CHIP 1608TYPE, CR1/16 000V PB(F)
U03AS MAIN (PE0630)		W1301	75009837	JUMPER, CHIP 1608TYPE, CR1/16 000V PB(F)
U03AS MAIN (PE0630)		W1302	75009837	JUMPER, CHIP 1608TYPE, CR1/16 000V PB(F)
U03AS MAIN (PE0630)		W1303	75009837	JUMPER, CHIP 1608TYPE, CR1/16 000V PB(F)
U03AS MAIN (PE0630)		W1304	75009837	JUMPER, CHIP 1608TYPE, CR1/16 000V PB(F)
U03AS MAIN (PE0630)		W7081	75009842	RESISTOR, CHIP (1005), CR1/16S 330JV PB(F)
U03AS MAIN (PE0630)		W8000	75009851	JUMPER, CHIP 1005TYPE, CR1/16S 000V PB(F)
U03AS MAIN (PE0630)		W8001	75009851	JUMPER, CHIP 1005TYPE, CR1/16S 000V PB(F)
U03AS MAIN (PE0630)		W8004	75009923	RESISTOR, CHIP (2012), CR1/10 000V PB(F)
U03AS MAIN (PE0630)		W8005	75009923	RESISTOR, CHIP (2012), CR1/10 000V PB(F)
U03AS MAIN (PE0630)		W8006	75012552	JUMPER, CHIP 3216TYPE, CR1/8 000V PB(F)
U03AS MAIN (PE0630)		W8007	75012552	JUMPER, CHIP 3216TYPE, CR1/8 000V PB(F)
U03AS MAIN (PE0630)		W8008	75012552	JUMPER, CHIP 3216TYPE, CR1/8 000V PB(F)
U03AS MAIN (PE0630)		W8009	75012552	JUMPER, CHIP 3216TYPE, CR1/8 000V PB(F)
U03AS MAIN (PE0630)		W9003	75009837	JUMPER, CHIP 1608TYPE, CR1/16 000V PB(F)
U03AS MAIN (PE0630)		W9004	75009837	JUMPER, CHIP 1608TYPE, CR1/16 000V PB(F)
U03AS MAIN (PE0630)		W9006	75009837	JUMPER, CHIP 1608TYPE, CR1/16 000V PB(F)

U03AS MAIN (PE0630)		W9007	75009837	JUMPER, CHIP 1608TYPE, CR1/16 000V PB(F)
U03AS MAIN (PE0630)		W9025	75009837	JUMPER, CHIP 1608TYPE, CR1/16 000V PB(F)
U03AS MAIN (PE0630)		W9027	75009837	JUMPER, CHIP 1608TYPE, CR1/16 000V PB(F)
U03AS MAIN (PE0630)		W9502	75010114	RESISTOR, CHIP (1608), CR1/16 102JV PB(F)
U03AS MAIN (PE0630)		W9503	75009837	JUMPER, CHIP 1608TYPE, CR1/16 000V PB(F)
U03AS MAIN (PE0630)		W9603	75009851	JUMPER, CHIP 1005TYPE, CR1/16S 000V PB(F)
U03AS MAIN (PE0630)		W9611	75009851	JUMPER, CHIP 1005TYPE, CR1/16S 000V PB(F)
U03AS MAIN (PE0630)		X1301	75012563	CRYSTAL, CHIP, SMD-49 12MHZ 12PF
U03AS MAIN (PE0630)		X8001	75011438	RESONATOR, 20PPM 70OHM CL=8PF, NX5032G
Miscellaneous	⚠	B001A	75011173	LCD PANEL, LC420WXN-SAB1
Miscellaneous		H001	75010735	TUNER, ENG37E05KF
Miscellaneous		MZ01A	75010968	WIRE HARNESS, MF0154
Miscellaneous	⚠	P801	23372353	POWER CORD, UK 250V3A FL/FUSE13
Miscellaneous	⚠	P801	23372368	POWER CORD, CEE FL M5206 250V2 206 - 2.3M
Miscellaneous		PP08	23974994	BAND, KESSOKU
Miscellaneous	⚠	U800	75012584	POWER UNIT, SRV2170WW
Miscellaneous		W661	75011535	SPEAKER, SPK1503AO, 35X120 8-OHM 10W
Miscellaneous		Z006	23103840	FERRITE CORE, TFE1013
Miscellaneous		Z007	23103914	FERRITE CORE, TFE1015AD
Miscellaneous		Z008	23103841	FERRITE CORE, TFE1014
Miscellaneous		Z009	23103778	FERRITE CORE, TFE1008
Accessory	⚠	Y101	75012576	OWNERS MANUAL
Accessory	⚠	Y101E	75012578	OWNERS MANUAL, EURO
Accessory	⚠	Y102E	75012579	OWNERS MANUAL, NORDIC
Accessory		Y105	75010347	OWNERS MANUAL, STD EU
Accessory		Y110	75012577	OWNERS MANUAL, QSUG
Accessory		Y114	75012580	OWNERS MANUAL, ITA, SCHEMA
Accessory		Y115	75009771	OWNERS MANUAL, XF DIGITAL UK RETUNE GU
Accessory		Y130	75010737	REMOCON HAND UNIT, CT-90300
Accessory		Y131	75012514	POWER UNIT BATTERY, R03UG(JE)SP-2TGC-T
Accessory		Y170	23845800	HOLDER, WIRE, NYLON66 D6.8
Accessory		Y186	75009788	CLOTH, CLEAN
Cabinet		A201	75010959	FRNT BEZEL ASSY
Cabinet	⚠	A401	75010960	BACK COVER ASSY
Cabinet		A412	75010345	SCREW, BITTB3X8 SBN
Cabinet		A420	75010961	BRACKET ASSY, STAND
Cabinet		A421	75011371	BASE COVER, STAND
Cabinet		A430	75005733	PIECE CLAMP HOLDER
Packing		A701A	75010966	CARTON BOX, TOP
Packing		A701B	75010965	CARTON BOX, BOTTOM
Packing		A702A	75010964	PAD, TOP PACKING
Packing		A702B	75010963	PAD, BOTTOM PACKING
Packing		A705	23518043	PACKING, JOINT

PARTS LIST

Block : U02A KEY/LED/RMT (PE0491)

Block		Location	Parts No.	Description
U02A KEY/LED/RMT (PE0491)	*	U02A	75010694	PC BOARD ASSY, PE0491A1, KEY/LED/RMT
U02A KEY/LED/RMT (PE0491)		CB02	75005969	CAPACITOR ELECTROLYTIC 10V 221M, ESRE100ETC2
U02A KEY/LED/RMT (PE0491)		CB03	76100104	CAPACITOR, CERAMIC CHIP, 25V F 0.1UF Z
U02A KEY/LED/RMT (PE0491)		CB04	76100104	CAPACITOR, CERAMIC CHIP, 25V F 0.1UF Z
U02A KEY/LED/RMT (PE0491)		CB05	75005969	CAPACITOR ELECTROLYTIC 10V 221M, ESRE100ETC2
U02A KEY/LED/RMT (PE0491)		DB01	23358602	DIODE, LED RED-GRN, SPR-54MVWFLMN
U02A KEY/LED/RMT (PE0491)		DB04	23358602	DIODE, LED RED-GRN, SPR-54MVWFLMN
U02A KEY/LED/RMT (PE0491)		DB22	23362251	DIODE, SDS511(SOD-323)
U02A KEY/LED/RMT (PE0491)		DB23	23362251	DIODE, SDS511(SOD-323)
U02A KEY/LED/RMT (PE0491)		GB01	23362042	DIODE, ZENER, UDZS6.8B
U02A KEY/LED/RMT (PE0491)		KB01	75002236	IC, GP1UE261RKVF
U02A KEY/LED/RMT (PE0491)		QB01	23205443	TRANSISTOR, 2SA1162-Y(F)
U02A KEY/LED/RMT (PE0491)		QB02	23205392	TRANSISTOR, 2SC5343UF-Y(BULK)
U02A KEY/LED/RMT (PE0491)		QB03	23205392	TRANSISTOR, 2SC5343UF-Y(BULK)
U02A KEY/LED/RMT (PE0491)		RA71	76011683	RESISTOR, CHIP, 1/20W 68K OHM J
U02A KEY/LED/RMT (PE0491)		RA72	76011223	RESISTOR, CHIP, 1/20W 22K OHM J
U02A KEY/LED/RMT (PE0491)		RA73	76011103	RESISTOR, CHIP, 1/20W 10K OHM J
U02A KEY/LED/RMT (PE0491)		RA74	76000445	CHIP JUMPER, 1608TYPE
U02A KEY/LED/RMT (PE0491)		RA77	76011103	RESISTOR, CHIP, 1/20W 10K OHM J
U02A KEY/LED/RMT (PE0491)		RA78	76000445	CHIP JUMPER, 1608TYPE
U02A KEY/LED/RMT (PE0491)		RA79	76000445	CHIP JUMPER, 1608TYPE
U02A KEY/LED/RMT (PE0491)		RB08	76011470	RESISTOR, CHIP, 1/20W 47 OHM J
U02A KEY/LED/RMT (PE0491)		RB09	76011470	RESISTOR, CHIP, 1/20W 47 OHM J
U02A KEY/LED/RMT (PE0491)		RB10	76011181	RESISTOR, CHIP, 1/20W 180 OHM J
U02A KEY/LED/RMT (PE0491)		RB11	76011271	RESISTOR, CHIP, 1/20W 270 OHM J
U02A KEY/LED/RMT (PE0491)		RB12	76011181	RESISTOR, CHIP, 1/20W 180 OHM J
U02A KEY/LED/RMT (PE0491)		RB13	76011102	RESISTOR, CHIP, 1/20W 1K OHM J
U02A KEY/LED/RMT (PE0491)		RB14	76011102	RESISTOR, CHIP, 1/20W 1K OHM J
U02A KEY/LED/RMT (PE0491)		RB18	76011102	RESISTOR, CHIP, 1/20W 1K OHM J
U02A KEY/LED/RMT (PE0491)		SA01	23344505	SWITCH, PUSH 1C1P
U02A KEY/LED/RMT (PE0491)		SA02	23344505	SWITCH, PUSH 1C1P
U02A KEY/LED/RMT (PE0491)		SA03	23344505	SWITCH, PUSH 1C1P
U02A KEY/LED/RMT (PE0491)		SA04	23344505	SWITCH, PUSH 1C1P
U02A KEY/LED/RMT (PE0491)		SA05	23344505	SWITCH, PUSH 1C1P
U02A KEY/LED/RMT (PE0491)		SA06	23344505	SWITCH, PUSH 1C1P
U02A KEY/LED/RMT (PE0491)		SA07	23344505	SWITCH, PUSH 1C1P

PARTS LIST

Block : U03AS MAIN (PE0630)

Block		Location	Parts No.	Description
U03AS MAIN (PE0630)	*	U03AS	75012704	PC BOARD ASSY, PE0630A, MAIN
U03AS MAIN (PE0630)		C1001	75008342	CAPACITOR, CERAMIC CHIP(1005), CM05B473K10AH
U03AS MAIN (PE0630)		C1002	75008342	CAPACITOR, CERAMIC CHIP(1005), CM05B473K10AH
U03AS MAIN (PE0630)		C1003	75008342	CAPACITOR, CERAMIC CHIP(1005), CM05B473K10AH
U03AS MAIN (PE0630)		C1004	75008342	CAPACITOR, CERAMIC CHIP(1005), CM05B473K10AH
U03AS MAIN (PE0630)		C1005	75008342	CAPACITOR, CERAMIC CHIP(1005), CM05B473K10AH
U03AS MAIN (PE0630)		C1006	75008342	CAPACITOR, CERAMIC CHIP(1005), CM05B473K10AH
U03AS MAIN (PE0630)		C1007	75009866	CAPACITOR, CERAMIC CHIP (1005), CM05W5R102K50A
U03AS MAIN (PE0630)		C1008	75008342	CAPACITOR, CERAMIC CHIP(1005), CM05B473K10AH
U03AS MAIN (PE0630)		C1009	75008342	CAPACITOR, CERAMIC CHIP(1005), CM05B473K10AH
U03AS MAIN (PE0630)		C1010	75008342	CAPACITOR, CERAMIC CHIP(1005), CM05B473K10AH
U03AS MAIN (PE0630)		C1011	75009866	CAPACITOR, CERAMIC CHIP (1005), CM05W5R102K50A
U03AS MAIN (PE0630)		C1012	75009867	CAPACITOR, CERAMIC CHIP (1005), CM05B104K10AH
U03AS MAIN (PE0630)		C1013	75009867	CAPACITOR, CERAMIC CHIP (1005), CM05B104K10AH
U03AS MAIN (PE0630)		C1014	75009867	CAPACITOR, CERAMIC CHIP (1005), CM05B104K10AH
U03AS MAIN (PE0630)		C1015	75012559	CAPACITOR, CERA CHIP, 10V JB 473K 1005 SIZE, C100
U03AS MAIN (PE0630)		C1016	75012559	CAPACITOR, CERA CHIP, 10V JB 473K 1005 SIZE, C100
U03AS MAIN (PE0630)		C1017	75012559	CAPACITOR, CERA CHIP, 10V JB 473K 1005 SIZE, C100
U03AS MAIN (PE0630)		C1018	75012559	CAPACITOR, CERA CHIP, 10V JB 473K 1005 SIZE, C100
U03AS MAIN (PE0630)		C1019	75012559	CAPACITOR, CERA CHIP, 10V JB 473K 1005 SIZE, C100
U03AS MAIN (PE0630)		C1020	75012559	CAPACITOR, CERA CHIP, 10V JB 473K 1005 SIZE, C100
U03AS MAIN (PE0630)		C1021	75012559	CAPACITOR, CERA CHIP, 10V JB 473K 1005 SIZE, C100
U03AS MAIN (PE0630)		C1022	75009867	CAPACITOR, CERAMIC CHIP (1005), CM05B104K10AH
U03AS MAIN (PE0630)		C1023	75009881	CAPACITOR, CERAMIC CHIP (2012), C2012JB1A106KT
U03AS MAIN (PE0630)		C1024	75009871	CAPACITOR, CERAMIC CHIP (1005), GRM1552C1H100J
U03AS MAIN (PE0630)		C1025	75009836	JUMPER, CHIP 1005TYPE, CR1/16S 000V PB(F)
U03AS MAIN (PE0630)		C1100	75012556	CAPACITOR, CERA CHIP, 50V JB 331K 1005 SIZE, C100
U03AS MAIN (PE0630)		C1101	75012556	CAPACITOR, CERA CHIP, 50V JB 331K 1005 SIZE, C100
U03AS MAIN (PE0630)		C1102	75012556	CAPACITOR, CERA CHIP, 50V JB 331K 1005 SIZE, C100
U03AS MAIN (PE0630)		C1103	75012556	CAPACITOR, CERA CHIP, 50V JB 331K 1005 SIZE, C100
U03AS MAIN (PE0630)		C1104	75012556	CAPACITOR, CERA CHIP, 50V JB 331K 1005 SIZE, C100
U03AS MAIN (PE0630)		C1105	75012556	CAPACITOR, CERA CHIP, 50V JB 331K 1005 SIZE, C100
U03AS MAIN (PE0630)		C1106	75012556	CAPACITOR, CERA CHIP, 50V JB 331K 1005 SIZE, C100
U03AS MAIN (PE0630)		C1107	75012556	CAPACITOR, CERA CHIP, 50V JB 331K 1005 SIZE, C100
U03AS MAIN (PE0630)		C1108	75009932	CAPACITOR, CARAMIC CHIP (1005), CM05W5R561K50A
U03AS MAIN (PE0630)		C1109	75009932	CAPACITOR, CARAMIC CHIP (1005), CM05W5R561K50A
U03AS MAIN (PE0630)		C1110	75009932	CAPACITOR, CARAMIC CHIP (1005), CM05W5R561K50A
U03AS MAIN (PE0630)		C1111	75009932	CAPACITOR, CARAMIC CHIP (1005), CM05W5R561K50A
U03AS MAIN (PE0630)		C1112	75009932	CAPACITOR, CARAMIC CHIP (1005), CM05W5R561K50A
U03AS MAIN (PE0630)		C1113	75009932	CAPACITOR, CARAMIC CHIP (1005), CM05W5R561K50A
U03AS MAIN (PE0630)		C1114	75009932	CAPACITOR, CARAMIC CHIP (1005), CM05W5R561K50A
U03AS MAIN (PE0630)		C1115	75009932	CAPACITOR, CARAMIC CHIP (1005), CM05W5R561K50A
U03AS MAIN (PE0630)		C1116	75005754	CAPACITOR, CERAMIC CHIP, GRM188B31A225KE33D
U03AS MAIN (PE0630)		C1117	75005754	CAPACITOR, CERAMIC CHIP, GRM188B31A225KE33D
U03AS MAIN (PE0630)		C1118	75005754	CAPACITOR, CERAMIC CHIP, GRM188B31A225KE33D
U03AS MAIN (PE0630)		C1119	75005754	CAPACITOR, CERAMIC CHIP, GRM188B31A225KE33D

U03AS MAIN (PE0630)		C1120	75005754	CAPACITOR, CERAMIC CHIP, GRM188B31A225KE33D
U03AS MAIN (PE0630)		C1121	75005754	CAPACITOR, CERAMIC CHIP, GRM188B31A225KE33D
U03AS MAIN (PE0630)		C1122	75005754	CAPACITOR, CERAMIC CHIP, GRM188B31A225KE33D
U03AS MAIN (PE0630)		C1123	75005754	CAPACITOR, CERAMIC CHIP, GRM188B31A225KE33D
U03AS MAIN (PE0630)		C1124	75009875	CAPACITOR, CERAMIC CHIP (1608), GRM188B31H104K
U03AS MAIN (PE0630)		C1125	75012562	CAPACITOR, CERAMIC CHIP(1005), EMK105BJ153KV-F
U03AS MAIN (PE0630)		C1126	75012562	CAPACITOR, CERAMIC CHIP(1005), EMK105BJ153KV-F
U03AS MAIN (PE0630)		C1127	75005814	CAPACITOR, CERAMIC CHIP, 2012 GRM21BB31C106KE1
U03AS MAIN (PE0630)		C1128	75009869	CAPACITOR, CERAMIC CHIP (1005), CM05X5R105K06A
U03AS MAIN (PE0630)		C1130	75006008	CAPACITOR, CERAMIC CHIP (2012), GRM21BB31C475K
U03AS MAIN (PE0630)		C1131	75009875	CAPACITOR, CERAMIC CHIP (1608), GRM188B31H104K
U03AS MAIN (PE0630)		C1134	75012562	CAPACITOR, CERAMIC CHIP(1005), EMK105BJ153KV-F
U03AS MAIN (PE0630)		C1135	75012562	CAPACITOR, CERAMIC CHIP(1005), EMK105BJ153KV-F
U03AS MAIN (PE0630)		C1136	75012562	CAPACITOR, CERAMIC CHIP(1005), EMK105BJ153KV-F
U03AS MAIN (PE0630)		C1137	75012562	CAPACITOR, CERAMIC CHIP(1005), EMK105BJ153KV-F
U03AS MAIN (PE0630)		C1216	75009867	CAPACITOR, CERAMIC CHIP (1005), CM05B104K10AH
U03AS MAIN (PE0630)		C1301	75009869	CAPACITOR, CERAMIC CHIP (1005), CM05X5R105K06A
U03AS MAIN (PE0630)		C1302	75012554	CAPACITOR, CERA CHIP, 50V CH 220J 1005 SIZE, C10
U03AS MAIN (PE0630)		C1303	75012453	CAPACITOR, CERAMIC CHIP, 50V CH 150J, C1005CH1H
U03AS MAIN (PE0630)		C1310	75007603	CAPACITOR, CERAMIC CHIP(1005), CM05CH101J50AH
U03AS MAIN (PE0630)		C1401	75009867	CAPACITOR, CERAMIC CHIP (1005), CM05B104K10AH
U03AS MAIN (PE0630)		C1402	75009867	CAPACITOR, CERAMIC CHIP (1005), CM05B104K10AH
U03AS MAIN (PE0630)		C1403	75009867	CAPACITOR, CERAMIC CHIP (1005), CM05B104K10AH
U03AS MAIN (PE0630)		C1404	75009867	CAPACITOR, CERAMIC CHIP (1005), CM05B104K10AH
U03AS MAIN (PE0630)		C1405	75009867	CAPACITOR, CERAMIC CHIP (1005), CM05B104K10AH
U03AS MAIN (PE0630)		C1406	75009867	CAPACITOR, CERAMIC CHIP (1005), CM05B104K10AH
U03AS MAIN (PE0630)		C1407	75009867	CAPACITOR, CERAMIC CHIP (1005), CM05B104K10AH
U03AS MAIN (PE0630)		C1408	75009867	CAPACITOR, CERAMIC CHIP (1005), CM05B104K10AH
U03AS MAIN (PE0630)		C1409	75009867	CAPACITOR, CERAMIC CHIP (1005), CM05B104K10AH
U03AS MAIN (PE0630)		C1410	75009867	CAPACITOR, CERAMIC CHIP (1005), CM05B104K10AH
U03AS MAIN (PE0630)		C1411	75009867	CAPACITOR, CERAMIC CHIP (1005), CM05B104K10AH
U03AS MAIN (PE0630)		C1412	75009867	CAPACITOR, CERAMIC CHIP (1005), CM05B104K10AH
U03AS MAIN (PE0630)		C1413	75009867	CAPACITOR, CERAMIC CHIP (1005), CM05B104K10AH
U03AS MAIN (PE0630)		C1414	75009867	CAPACITOR, CERAMIC CHIP (1005), CM05B104K10AH
U03AS MAIN (PE0630)		C1415	75009867	CAPACITOR, CERAMIC CHIP (1005), CM05B104K10AH
U03AS MAIN (PE0630)		C1416	75009867	CAPACITOR, CERAMIC CHIP (1005), CM05B104K10AH
U03AS MAIN (PE0630)		C1417	75009867	CAPACITOR, CERAMIC CHIP (1005), CM05B104K10AH
U03AS MAIN (PE0630)		C1418	75009867	CAPACITOR, CERAMIC CHIP (1005), CM05B104K10AH
U03AS MAIN (PE0630)		C1419	75009867	CAPACITOR, CERAMIC CHIP (1005), CM05B104K10AH
U03AS MAIN (PE0630)		C1420	75009867	CAPACITOR, CERAMIC CHIP (1005), CM05B104K10AH
U03AS MAIN (PE0630)		C1421	75009867	CAPACITOR, CERAMIC CHIP (1005), CM05B104K10AH
U03AS MAIN (PE0630)		C1422	75009867	CAPACITOR, CERAMIC CHIP (1005), CM05B104K10AH
U03AS MAIN (PE0630)		C1423	75009867	CAPACITOR, CERAMIC CHIP (1005), CM05B104K10AH
U03AS MAIN (PE0630)		C1424	75009867	CAPACITOR, CERAMIC CHIP (1005), CM05B104K10AH
U03AS MAIN (PE0630)		C1425	75009867	CAPACITOR, CERAMIC CHIP (1005), CM05B104K10AH
U03AS MAIN (PE0630)		C1426	75009867	CAPACITOR, CERAMIC CHIP (1005), CM05B104K10AH
U03AS MAIN (PE0630)		C1502	75009867	CAPACITOR, CERAMIC CHIP (1005), CM05B104K10AH

U03AS MAIN (PE0630)		C1504	75009867	CAPACITOR, CERAMIC CHIP (1005), CM05B104K10AH
U03AS MAIN (PE0630)		C1505	75009867	CAPACITOR, CERAMIC CHIP (1005), CM05B104K10AH
U03AS MAIN (PE0630)		C1509	75009867	CAPACITOR, CERAMIC CHIP (1005), CM05B104K10AH
U03AS MAIN (PE0630)		C1510	75012561	CAPACITOR, CERA CHIP, 16V JB 104K 1005 SIZE, C100
U03AS MAIN (PE0630)		C1511	75009867	CAPACITOR, CERAMIC CHIP (1005), CM05B104K10AH
U03AS MAIN (PE0630)		C1518	75009867	CAPACITOR, CERAMIC CHIP (1005), CM05B104K10AH
U03AS MAIN (PE0630)		C1601	75009867	CAPACITOR, CERAMIC CHIP (1005), CM05B104K10AH
U03AS MAIN (PE0630)		C1602	75009867	CAPACITOR, CERAMIC CHIP (1005), CM05B104K10AH
U03AS MAIN (PE0630)		C1603	75009867	CAPACITOR, CERAMIC CHIP (1005), CM05B104K10AH
U03AS MAIN (PE0630)		C1604	75009867	CAPACITOR, CERAMIC CHIP (1005), CM05B104K10AH
U03AS MAIN (PE0630)		C1605	75009867	CAPACITOR, CERAMIC CHIP (1005), CM05B104K10AH
U03AS MAIN (PE0630)		C1606	75009867	CAPACITOR, CERAMIC CHIP (1005), CM05B104K10AH
U03AS MAIN (PE0630)		C1607	75009867	CAPACITOR, CERAMIC CHIP (1005), CM05B104K10AH
U03AS MAIN (PE0630)		C1608	75009867	CAPACITOR, CERAMIC CHIP (1005), CM05B104K10AH
U03AS MAIN (PE0630)		C1609	75009867	CAPACITOR, CERAMIC CHIP (1005), CM05B104K10AH
U03AS MAIN (PE0630)		C1610	75009867	CAPACITOR, CERAMIC CHIP (1005), CM05B104K10AH
U03AS MAIN (PE0630)		C1701	75009867	CAPACITOR, CERAMIC CHIP (1005), CM05B104K10AH
U03AS MAIN (PE0630)		C1702	75009867	CAPACITOR, CERAMIC CHIP (1005), CM05B104K10AH
U03AS MAIN (PE0630)		C1703	75009867	CAPACITOR, CERAMIC CHIP (1005), CM05B104K10AH
U03AS MAIN (PE0630)		C2000	75009875	CAPACITOR, CERAMIC CHIP (1608), GRM188B31H104K
U03AS MAIN (PE0630)		C2001	75005754	CAPACITOR, CERAMIC CHIP, GRM188B31A225KE33D
U03AS MAIN (PE0630)		C2105	75005814	CAPACITOR, CERAMIC CHIP, 2012 GRM21BB31C106KE1
U03AS MAIN (PE0630)		C2106	75005814	CAPACITOR, CERAMIC CHIP, 2012 GRM21BB31C106KE1
U03AS MAIN (PE0630)		C2107	75007611	CAPACITOR, CERAMIC CHIP(1005), GRM155B11H152KA
U03AS MAIN (PE0630)		C2108	75007611	CAPACITOR, CERAMIC CHIP(1005), GRM155B11H152KA
U03AS MAIN (PE0630)		C2109	75009872	CAPACITOR, ELECTROLYTIC CHIP, EEEHB1C100R
U03AS MAIN (PE0630)		C2203	75005814	CAPACITOR, CERAMIC CHIP, 2012 GRM21BB31C106KE1
U03AS MAIN (PE0630)		C2204	75005814	CAPACITOR, CERAMIC CHIP, 2012 GRM21BB31C106KE1
U03AS MAIN (PE0630)		C2205	75007611	CAPACITOR, CERAMIC CHIP(1005), GRM155B11H152KA
U03AS MAIN (PE0630)		C2206	75007611	CAPACITOR, CERAMIC CHIP(1005), GRM155B11H152KA
U03AS MAIN (PE0630)		C2207	75009872	CAPACITOR, ELECTROLYTIC CHIP, EEEHB1C100R
U03AS MAIN (PE0630)		C2208	75009872	CAPACITOR, ELECTROLYTIC CHIP, EEEHB1C100R
U03AS MAIN (PE0630)		C2401	75007605	CAPACITOR, CERAMIC CHIP(1005), CM05W5R222K50AH
U03AS MAIN (PE0630)		C2402	75007605	CAPACITOR, CERAMIC CHIP(1005), CM05W5R222K50AH
U03AS MAIN (PE0630)		C2403	75009866	CAPACITOR, CERAMIC CHIP (1005), CM05W5R102K50A
U03AS MAIN (PE0630)		C2404	75009866	CAPACITOR, CERAMIC CHIP (1005), CM05W5R102K50A
U03AS MAIN (PE0630)		C2405	75009866	CAPACITOR, CERAMIC CHIP (1005), CM05W5R102K50A
U03AS MAIN (PE0630)		C2406	75009866	CAPACITOR, CERAMIC CHIP (1005), CM05W5R102K50A
U03AS MAIN (PE0630)		C2701	75009869	CAPACITOR, CERAMIC CHIP (1005), CM05X5R105K06AH
U03AS MAIN (PE0630)		C2702	75009869	CAPACITOR, CERAMIC CHIP (1005), CM05X5R105K06AH
U03AS MAIN (PE0630)		C2704	75006011	CAPACITOR, ELECTROLYTIC CHIP, EEEHB1A101P
U03AS MAIN (PE0630)		C2705	75007607	CAPACITOR, ELECTROLYTIC CHIP, 16SGV470M8X10.5
U03AS MAIN (PE0630)		C2711	75009869	CAPACITOR, CERAMIC CHIP (1005), CM05X5R105K06AH
U03AS MAIN (PE0630)		C2712	75009869	CAPACITOR, CERAMIC CHIP (1005), CM05X5R105K06AH
U03AS MAIN (PE0630)		C2715	75007607	CAPACITOR, ELECTROLYTIC CHIP, 16SGV470M8X10.5
U03AS MAIN (PE0630)		C2805	75009867	CAPACITOR, CERAMIC CHIP (1005), CM05B104K10AH
U03AS MAIN (PE0630)		C2806	75009869	CAPACITOR, CERAMIC CHIP (1005), CM05X5R105K06AH

U03AS MAIN (PE0630)		C2807	75002272	CAPACITOR, CERAMIC CHIP, 25V CH 220PF J, C1005CH
U03AS MAIN (PE0630)		C2808	75007604	CAPACITOR, CERAMIC CHI(1005), CM05W5R152K50AH
U03AS MAIN (PE0630)		C2809	75007605	CAPACITOR, CERAMIC CHIP(1005), CM05W5R222K50AH
U03AS MAIN (PE0630)		C2810	75009867	CAPACITOR, CERAMIC CHIP (1005), CM05B104K10AH
U03AS MAIN (PE0630)		C2900	75005754	CAPACITOR, CERAMIC CHIP, GRM188B31A225KE33D
U03AS MAIN (PE0630)		C2901	75005754	CAPACITOR, CERAMIC CHIP, GRM188B31A225KE33D
U03AS MAIN (PE0630)		C2905	75005754	CAPACITOR, CERAMIC CHIP, GRM188B31A225KE33D
U03AS MAIN (PE0630)		C3000	75009867	CAPACITOR, CERAMIC CHIP (1005), CM05B104K10AH
U03AS MAIN (PE0630)		C3001	75009867	CAPACITOR, CERAMIC CHIP (1005), CM05B104K10AH
U03AS MAIN (PE0630)		C3004	75009856	CAPACITOR, CERAMIC CHIP (1608), CM105W5R104K16
U03AS MAIN (PE0630)		C3005	75009856	CAPACITOR, CERAMIC CHIP (1608), CM105W5R104K16
U03AS MAIN (PE0630)		C3006	75009856	CAPACITOR, CERAMIC CHIP (1608), CM105W5R104K16
U03AS MAIN (PE0630)		C3007	75009867	CAPACITOR, CERAMIC CHIP (1005), CM05B104K10AH
U03AS MAIN (PE0630)		C3008	75009877	CAPACITOR, CERAMIC CHIP (1005), GRM155B11E103KA
U03AS MAIN (PE0630)		C3009	75009867	CAPACITOR, CERAMIC CHIP (1005), CM05B104K10AH
U03AS MAIN (PE0630)		C3010	75009877	CAPACITOR, CERAMIC CHIP (1005), GRM155B11E103KA
U03AS MAIN (PE0630)		C3011	75009867	CAPACITOR, CERAMIC CHIP (1005), CM05B104K10AH
U03AS MAIN (PE0630)		C3013	75009877	CAPACITOR, CERAMIC CHIP (1005), GRM155B11E103KA
U03AS MAIN (PE0630)		C3014	75009867	CAPACITOR, CERAMIC CHIP (1005), CM05B104K10AH
U03AS MAIN (PE0630)		C3015	75009877	CAPACITOR, CERAMIC CHIP (1005), GRM155B11E103KA
U03AS MAIN (PE0630)		C3016	75009867	CAPACITOR, CERAMIC CHIP (1005), CM05B104K10AH
U03AS MAIN (PE0630)		C3017	75009877	CAPACITOR, CERAMIC CHIP (1005), GRM155B11E103KA
U03AS MAIN (PE0630)		C3018	75009867	CAPACITOR, CERAMIC CHIP (1005), CM05B104K10AH
U03AS MAIN (PE0630)		C3019	75009877	CAPACITOR, CERAMIC CHIP (1005), GRM155B11E103KA
U03AS MAIN (PE0630)		C3020	75012555	CAPACITOR, CERA CHIP, 50V CH 470J 1005 SIZE, C100
U03AS MAIN (PE0630)		C3021	75012555	CAPACITOR, CERA CHIP, 50V CH 470J 1005 SIZE, C100
U03AS MAIN (PE0630)		C3022	75009867	CAPACITOR, CERAMIC CHIP (1005), CM05B104K10AH
U03AS MAIN (PE0630)		C3501	75009867	CAPACITOR, CERAMIC CHIP (1005), CM05B104K10AH
U03AS MAIN (PE0630)		C3502	75009867	CAPACITOR, CERAMIC CHIP (1005), CM05B104K10AH
U03AS MAIN (PE0630)		C3503	75009861	CAPACITOR, CERAMIC CHIP (1608), CM105B105K06ATN
U03AS MAIN (PE0630)		C5201	75007603	CAPACITOR, CERAMIC CHIP(1005), CM05CH101J50AH
U03AS MAIN (PE0630)		C5202	75009867	CAPACITOR, CERAMIC CHIP (1005), CM05B104K10AH
U03AS MAIN (PE0630)		C5203	75007603	CAPACITOR, CERAMIC CHIP(1005), CM05CH101J50AH
U03AS MAIN (PE0630)		C5204	75007603	CAPACITOR, CERAMIC CHIP(1005), CM05CH101J50AH
U03AS MAIN (PE0630)		C5205	75007603	CAPACITOR, CERAMIC CHIP(1005), CM05CH101J50AH
U03AS MAIN (PE0630)		C6000	75009862	CAPACITOR, CERAMIC CHIP (3216), GRM31CB11A475KA
U03AS MAIN (PE0630)		C6001	75009862	CAPACITOR, CERAMIC CHIP (3216), GRM31CB11A475KA
U03AS MAIN (PE0630)		C6002	75007603	CAPACITOR, CERAMIC CHIP(1005), CM05CH101J50AH
U03AS MAIN (PE0630)		C6003	75007603	CAPACITOR, CERAMIC CHIP(1005), CM05CH101J50AH
U03AS MAIN (PE0630)		C6004	75007609	CAPACITOR, ELECTROLYTIC CHIP, EEEFK1E470P
U03AS MAIN (PE0630)		C6005	75006008	CAPACITOR, CERAMIC CHIP (2012), GRM21BB31C475KA
U03AS MAIN (PE0630)		C6029	75009862	CAPACITOR, CERAMIC CHIP (3216), GRM31CB11A475KA
U03AS MAIN (PE0630)		C6030	75009862	CAPACITOR, CERAMIC CHIP (3216), GRM31CB11A475KA
U03AS MAIN (PE0630)		C6060	75007603	CAPACITOR, CERAMIC CHIP(1005), CM05CH101J50AH
U03AS MAIN (PE0630)		C6063	75007603	CAPACITOR, CERAMIC CHIP(1005), CM05CH101J50AH
U03AS MAIN (PE0630)		C6066	75007609	CAPACITOR, ELECTROLYTIC CHIP, EEEFK1E470P
U03AS MAIN (PE0630)		C6101	75005755	CAPACITOR, CERAMIC CHIP, GRM1552C1H390JZ01D

U03AS MAIN (PE0630)		C6102	75006010	CAPACITOR, CERAMIC CHIP (1608), GRM188B31E105K
U03AS MAIN (PE0630)		C6103	75009927	CAPACITOR, CERAMIC CHIP (1608), CM105B104K25AT
U03AS MAIN (PE0630)		C6104	75009927	CAPACITOR, CERAMIC CHIP (1608), CM105B104K25AT
U03AS MAIN (PE0630)		C6105	75009927	CAPACITOR, CERAMIC CHIP (1608), CM105B104K25AT
U03AS MAIN (PE0630)		C6106	75005709	CAPACITOR, CHIP CERA, 50V B 0.47UF K, GRM21BB31
U03AS MAIN (PE0630)		C6107	75009853	CAPACITOR, CERAMIC CHIP (1608), CM105W5R103K50
U03AS MAIN (PE0630)		C6108	75009853	CAPACITOR, CERAMIC CHIP (1608), CM105W5R103K50
U03AS MAIN (PE0630)		C6109	75009853	CAPACITOR, CERAMIC CHIP (1608), CM105W5R103K50
U03AS MAIN (PE0630)		C6110	75005755	CAPACITOR, CERAMIC CHIP, GRM1552C1H390JZ01D
U03AS MAIN (PE0630)		C6111	75009927	CAPACITOR, CERAMIC CHIP (1608), CM105B104K25AT
U03AS MAIN (PE0630)		C6112	75009927	CAPACITOR, CERAMIC CHIP (1608), CM105B104K25AT
U03AS MAIN (PE0630)		C6113	75009927	CAPACITOR, CERAMIC CHIP (1608), CM105B104K25AT
U03AS MAIN (PE0630)		C6114	75009927	CAPACITOR, CERAMIC CHIP (1608), CM105B104K25AT
U03AS MAIN (PE0630)		C6115	75005709	CAPACITOR, CHIP CERA, 50V B 0.47UF K, GRM21BB31
U03AS MAIN (PE0630)		C6116	75009853	CAPACITOR, CERAMIC CHIP (1608), CM105W5R103K50
U03AS MAIN (PE0630)		C6117	75009853	CAPACITOR, CERAMIC CHIP (1608), CM105W5R103K50
U03AS MAIN (PE0630)		C6118	75009853	CAPACITOR, CERAMIC CHIP (1608), CM105W5R103K50
U03AS MAIN (PE0630)		C6119	75006010	CAPACITOR, CERAMIC CHIP (1608), GRM188B31E105K
U03AS MAIN (PE0630)		C6120	75009927	CAPACITOR, CERAMIC CHIP (1608), CM105B104K25AT
U03AS MAIN (PE0630)		C6121	75009927	CAPACITOR, CERAMIC CHIP (1608), CM105B104K25AT
U03AS MAIN (PE0630)		C6122	75010772	CAPACITOR, CERAMIC CHIP (2012), CM21B106M06AT
U03AS MAIN (PE0630)		C6124	75008346	CAPACITOR, CERAMIC CHIP(1005), GRM155B31A334KE
U03AS MAIN (PE0630)		C6125	75008340	CAPACITOR, CERAMIC CHIP(1005), CM05W5R102K50A
U03AS MAIN (PE0630)		C6126	76073057	CAPACITOR, ELECTROLYTIC, 25V 1000UF M
U03AS MAIN (PE0630)		C6127	75010144	CAPACITOR, CERAMIC CHIP (1608), CM105CH470J50A
U03AS MAIN (PE0630)		C6128	75009868	CAPACITOR, CERAMIC CHIP (1608), CM105X5R225K06
U03AS MAIN (PE0630)		C6129	75009867	CAPACITOR, CERAMIC CHIP (1005), CM05B104K10AH
U03AS MAIN (PE0630)		C6130	75009927	CAPACITOR, CERAMIC CHIP (1608), CM105B104K25AT
U03AS MAIN (PE0630)		C6131	75002273	CAPACITOR, CERAMIC CHIP, 50V R 680PF K, CM05W5R
U03AS MAIN (PE0630)		C6132	75010714	CAPACITOR, CERAMIC CHIP (1005), GRM155B11H472K
U03AS MAIN (PE0630)		C6133	75009877	CAPACITOR, CERAMIC CHIP (1005), GRM155B11E103K
U03AS MAIN (PE0630)		C6134	75009878	CAPACITOR, CERAMIC CHIP (1608), GRM188B11A105K
U03AS MAIN (PE0630)		C6136	75006008	CAPACITOR, CERAMIC CHIP (2012), GRM21BB31C475K
U03AS MAIN (PE0630)		C6137	75009927	CAPACITOR, CERAMIC CHIP (1608), CM105B104K25AT
U03AS MAIN (PE0630)		C6138	75010144	CAPACITOR, CERAMIC CHIP (1608), CM105CH470J50A
U03AS MAIN (PE0630)		C6139	75006010	CAPACITOR, CERAMIC CHIP (1608), GRM188B31E105K
U03AS MAIN (PE0630)		C6140	75006010	CAPACITOR, CERAMIC CHIP (1608), GRM188B31E105K
U03AS MAIN (PE0630)		C6301	75010499	CAPACITOR, ELECTROLYTIC CHIP, 16V 471M 3D LIFE L
U03AS MAIN (PE0630)		C6303	75007612	CAPACITOR, ELECTROLYTIC CHIP, MVJ50VC1MD60E0
U03AS MAIN (PE0630)		C6401	75006008	CAPACITOR, CERAMIC CHIP (2012), GRM21BB31C475K
U03AS MAIN (PE0630)		C6402	75006008	CAPACITOR, CERAMIC CHIP (2012), GRM21BB31C475K
U03AS MAIN (PE0630)		C6403	75007605	CAPACITOR, CERAMIC CHIP(1005), CM05W5R222K50A
U03AS MAIN (PE0630)		C6404	75007605	CAPACITOR, CERAMIC CHIP(1005), CM05W5R222K50A
U03AS MAIN (PE0630)		C6405	75010709	CAPACITOR, CERAMIC CHIP (2012), CM21X5R105K16A
U03AS MAIN (PE0630)		C6406	75010709	CAPACITOR, CERAMIC CHIP (2012), CM21X5R105K16A
U03AS MAIN (PE0630)		C6407	75010771	CAPACITOR, ELECTROLYTIC CHIP, MVJ16VC47MF60E0
U03AS MAIN (PE0630)		C6408	75010771	CAPACITOR, ELECTROLYTIC CHIP, MVJ16VC47MF60E0

U03AS MAIN (PE0630)		C6409	75010771	CAPACITOR, ELECTROLYTIC CHIP, MVJ16VC47MF60E0
U03AS MAIN (PE0630)		C6410	75010771	CAPACITOR, ELECTROLYTIC CHIP, MVJ16VC47MF60E0
U03AS MAIN (PE0630)		C6411	75009872	CAPACITOR, ELECTROLYTIC CHIP, EEEHB1C100R
U03AS MAIN (PE0630)		C6412	75009853	CAPACITOR, CERAMIC CHIP (1608), CM105W5R103K50
U03AS MAIN (PE0630)		C6413	75010771	CAPACITOR, ELECTROLYTIC CHIP, MVJ16VC47MF60E0
U03AS MAIN (PE0630)		C6415	75005754	CAPACITOR, CERAMIC CHIP, GRM188B31A225KE33D
U03AS MAIN (PE0630)		C6416	75012085	CAPACITOR, CERAMIC CHIP(1608), CM105CH100D50AT
U03AS MAIN (PE0630)		C7001	75009864	CAPACITOR, CERAMIC CHIP (1005), CM05Y5V104Z16A
U03AS MAIN (PE0630)		C7002	75009864	CAPACITOR, CERAMIC CHIP (1005), CM05Y5V104Z16A
U03AS MAIN (PE0630)		C7003	75009864	CAPACITOR, CERAMIC CHIP (1005), CM05Y5V104Z16A
U03AS MAIN (PE0630)		C7004	75009864	CAPACITOR, CERAMIC CHIP (1005), CM05Y5V104Z16A
U03AS MAIN (PE0630)		C7005	75009864	CAPACITOR, CERAMIC CHIP (1005), CM05Y5V104Z16A
U03AS MAIN (PE0630)		C7007	75009864	CAPACITOR, CERAMIC CHIP (1005), CM05Y5V104Z16A
U03AS MAIN (PE0630)		C7008	75009864	CAPACITOR, CERAMIC CHIP (1005), CM05Y5V104Z16A
U03AS MAIN (PE0630)		C7009	75009864	CAPACITOR, CERAMIC CHIP (1005), CM05Y5V104Z16A
U03AS MAIN (PE0630)		C7010	75009864	CAPACITOR, CERAMIC CHIP (1005), CM05Y5V104Z16A
U03AS MAIN (PE0630)		C7011	75009864	CAPACITOR, CERAMIC CHIP (1005), CM05Y5V104Z16A
U03AS MAIN (PE0630)		C7012	75009864	CAPACITOR, CERAMIC CHIP (1005), CM05Y5V104Z16A
U03AS MAIN (PE0630)		C7013	75009867	CAPACITOR, CERAMIC CHIP (1005), CM05B104K10AH
U03AS MAIN (PE0630)		C7014	75009867	CAPACITOR, CERAMIC CHIP (1005), CM05B104K10AH
U03AS MAIN (PE0630)		C7015	75009864	CAPACITOR, CERAMIC CHIP (1005), CM05Y5V104Z16A
U03AS MAIN (PE0630)		C7018	75009877	CAPACITOR, CERAMIC CHIP (1005), GRM155B11E103K
U03AS MAIN (PE0630)		C7019	75009925	CAPACITOR, CERAMIC CHIP (1608), CM105Y5V105Z10
U03AS MAIN (PE0630)		C7020	75009925	CAPACITOR, CERAMIC CHIP (1608), CM105Y5V105Z10
U03AS MAIN (PE0630)		C7021	75008673	CAPACITOR, CERAMIC CHIP(2012), CM21B474K25AT
U03AS MAIN (PE0630)		C7022	75009925	CAPACITOR, CERAMIC CHIP (1608), CM105Y5V105Z10
U03AS MAIN (PE0630)		C7024	75009864	CAPACITOR, CERAMIC CHIP (1005), CM05Y5V104Z16A
U03AS MAIN (PE0630)		C7027	75009925	CAPACITOR, CERAMIC CHIP (1608), CM105Y5V105Z10
U03AS MAIN (PE0630)		C7028	75009867	CAPACITOR, CERAMIC CHIP (1005), CM05B104K10AH
U03AS MAIN (PE0630)		C7081	75009867	CAPACITOR, CERAMIC CHIP (1005), CM05B104K10AH
U03AS MAIN (PE0630)		C8000	75009867	CAPACITOR, CERAMIC CHIP (1005), CM05B104K10AH
U03AS MAIN (PE0630)		C8001	75009867	CAPACITOR, CERAMIC CHIP (1005), CM05B104K10AH
U03AS MAIN (PE0630)		C8002	75010711	CAPACITOR, CERAMIC CHIP (1005), CM05W5R223K16A
U03AS MAIN (PE0630)		C8003	75009867	CAPACITOR, CERAMIC CHIP (1005), CM05B104K10AH
U03AS MAIN (PE0630)		C8004	75009867	CAPACITOR, CERAMIC CHIP (1005), CM05B104K10AH
U03AS MAIN (PE0630)		C8005	75010711	CAPACITOR, CERAMIC CHIP (1005), CM05W5R223K16A
U03AS MAIN (PE0630)		C8006	75009867	CAPACITOR, CERAMIC CHIP (1005), CM05B104K10AH
U03AS MAIN (PE0630)		C8008	75009869	CAPACITOR, CERAMIC CHIP (1005), CM05X5R105K06A
U03AS MAIN (PE0630)		C8009	75009869	CAPACITOR, CERAMIC CHIP (1005), CM05X5R105K06A
U03AS MAIN (PE0630)		C8010	75009869	CAPACITOR, CERAMIC CHIP (1005), CM05X5R105K06A
U03AS MAIN (PE0630)		C8011	75009867	CAPACITOR, CERAMIC CHIP (1005), CM05B104K10AH
U03AS MAIN (PE0630)		C8013	75009869	CAPACITOR, CERAMIC CHIP (1005), CM05X5R105K06A
U03AS MAIN (PE0630)		C8014	75009869	CAPACITOR, CERAMIC CHIP (1005), CM05X5R105K06A
U03AS MAIN (PE0630)		C8015	75009866	CAPACITOR, CERAMIC CHIP (1005), CM05W5R102K50A
U03AS MAIN (PE0630)		C8016	75009866	CAPACITOR, CERAMIC CHIP (1005), CM05W5R102K50A
U03AS MAIN (PE0630)		C8017	75009869	CAPACITOR, CERAMIC CHIP (1005), CM05X5R105K06A
U03AS MAIN (PE0630)		C8018	75009869	CAPACITOR, CERAMIC CHIP (1005), CM05X5R105K06A

U03AS MAIN (PE0630)		C8019	75009869	CAPACITOR, CERAMIC CHIP (1005), CM05X5R105K06A
U03AS MAIN (PE0630)		C8020	75009869	CAPACITOR, CERAMIC CHIP (1005), CM05X5R105K06A
U03AS MAIN (PE0630)		C8023	75009869	CAPACITOR, CERAMIC CHIP (1005), CM05X5R105K06A
U03AS MAIN (PE0630)		C8024	75010501	CAPACITOR, CERAMIC CHIP (1005), UMK105CH080DW-
U03AS MAIN (PE0630)		C8025	75010501	CAPACITOR, CERAMIC CHIP (1005), UMK105CH080DW-
U03AS MAIN (PE0630)		C8026	75009869	CAPACITOR, CERAMIC CHIP (1005), CM05X5R105K06A
U03AS MAIN (PE0630)		C8027	75009869	CAPACITOR, CERAMIC CHIP (1005), CM05X5R105K06A
U03AS MAIN (PE0630)		C8028	75009869	CAPACITOR, CERAMIC CHIP (1005), CM05X5R105K06A
U03AS MAIN (PE0630)		C8501	75009869	CAPACITOR, CERAMIC CHIP (1005), CM05X5R105K06A
U03AS MAIN (PE0630)		C8502	75009866	CAPACITOR, CERAMIC CHIP (1005), CM05W5R102K50A
U03AS MAIN (PE0630)		C8506	75009879	CAPACITOR, CERAMIC CHIP (1005), GRM1552C1H330J
U03AS MAIN (PE0630)		C8507	75009879	CAPACITOR, CERAMIC CHIP (1005), GRM1552C1H330J
U03AS MAIN (PE0630)		C8508	75009869	CAPACITOR, CERAMIC CHIP (1005), CM05X5R105K06A
U03AS MAIN (PE0630)		C8510	75006003	CAPACITOR, EMVE100ADA471MHA0G
U03AS MAIN (PE0630)		C8512	75007608	CAPACITOR, ELECTROLYTIC CHIP, MVJ50VC10MF60E0
U03AS MAIN (PE0630)		C8514	75012560	CAPACITOR, CERA CHIP, 10V JB 104K 1005 SIZE, C100
U03AS MAIN (PE0630)		C8515	75012560	CAPACITOR, CERA CHIP, 10V JB 104K 1005 SIZE, C100
U03AS MAIN (PE0630)		C8517	75009863	CAPACITOR, CERAMIC CHIP (1005), CM05W5R103K16A
U03AS MAIN (PE0630)		C8518	75009863	CAPACITOR, CERAMIC CHIP (1005), CM05W5R103K16A
U03AS MAIN (PE0630)		C8520	75007603	CAPACITOR, CERAMIC CHIP(1005), CM05CH101J50AH
U03AS MAIN (PE0630)		C8521	75007603	CAPACITOR, CERAMIC CHIP(1005), CM05CH101J50AH
U03AS MAIN (PE0630)		C9003	75009856	CAPACITOR, CERAMIC CHIP (1608), CM105W5R104K16
U03AS MAIN (PE0630)		C9004	75009859	CAPACITOR, CERAMIC CHIP (1608), CM105CH102J50A
U03AS MAIN (PE0630)		C9005	75009856	CAPACITOR, CERAMIC CHIP (1608), CM105W5R104K16
U03AS MAIN (PE0630)		C9202	75009867	CAPACITOR, CERAMIC CHIP (1005), CM05B104K10AH
U03AS MAIN (PE0630)		C9205	75009868	CAPACITOR, CERAMIC CHIP (1608), CM105X5R225K06A
U03AS MAIN (PE0630)		C9207	75009239	CAPACITOR, CERAMIC CHIP(1608), CM105W5R222K50A
U03AS MAIN (PE0630)		C9208	75009239	CAPACITOR, CERAMIC CHIP(1608), CM105W5R222K50A
U03AS MAIN (PE0630)		C9211	75009239	CAPACITOR, CERAMIC CHIP(1608), CM105W5R222K50A
U03AS MAIN (PE0630)		C9216	75009239	CAPACITOR, CERAMIC CHIP(1608), CM105W5R222K50A
U03AS MAIN (PE0630)		C9224	75009239	CAPACITOR, CERAMIC CHIP(1608), CM105W5R222K50A
U03AS MAIN (PE0630)		C9501	75009867	CAPACITOR, CERAMIC CHIP (1005), CM05B104K10AH
U03AS MAIN (PE0630)		C9503	75009878	CAPACITOR, CERAMIC CHIP (1608), GRM188B11A105K
U03AS MAIN (PE0630)		C9504	75009881	CAPACITOR, CERAMIC CHIP (2012), C2012JB1A106KT
U03AS MAIN (PE0630)		C9506	75009878	CAPACITOR, CERAMIC CHIP (1608), GRM188B11A105K
U03AS MAIN (PE0630)		C9507	75009867	CAPACITOR, CERAMIC CHIP (1005), CM05B104K10AH
U03AS MAIN (PE0630)		C9508	75009881	CAPACITOR, CERAMIC CHIP (2012), C2012JB1A106KT
U03AS MAIN (PE0630)		C9511	75007603	CAPACITOR, CERAMIC CHIP(1005), CM05CH101J50AH
U03AS MAIN (PE0630)		C9513	75009881	CAPACITOR, CERAMIC CHIP (2012), C2012JB1A106KT
U03AS MAIN (PE0630)		C9514	75006005	CAPACITOR, CERAMIC CHIP (1005), CM05X7R682K25A
U03AS MAIN (PE0630)		C9515	75009877	CAPACITOR, CERAMIC CHIP (1005), GRM155B11E103K
U03AS MAIN (PE0630)		C9516	75009877	CAPACITOR, CERAMIC CHIP (1005), GRM155B11E103K
U03AS MAIN (PE0630)		C9517	75012557	CAPACITOR, CERA CHIP, 50V JB 102K 1005 SIZE, C100
U03AS MAIN (PE0630)		C9518	75009874	CAPACITOR, CERAMIC CHIP (2012), GRM21BB30J226M
U03AS MAIN (PE0630)		C9519	75009874	CAPACITOR, CERAMIC CHIP (2012), GRM21BB30J226M
U03AS MAIN (PE0630)		C9534	75011120	CAPACITOR, CERAMIC CHIP (1005), CM05W5R272K50A
U03AS MAIN (PE0630)		C9535	75007603	CAPACITOR, CERAMIC CHIP(1005), CM05CH101J50AH

U03AS MAIN (PE0630)		C9538	75006005	CAPACITOR, CERAMIC CHIP (1005), CM05X7R682K25A
U03AS MAIN (PE0630)		C9539	75009874	CAPACITOR, CERAMIC CHIP (2012), GRM21BB30J226M
U03AS MAIN (PE0630)		C9540	75009874	CAPACITOR, CERAMIC CHIP (2012), GRM21BB30J226M
U03AS MAIN (PE0630)		C9541	75009877	CAPACITOR, CERAMIC CHIP (1005), GRM155B11E103K
U03AS MAIN (PE0630)		C9542	75009877	CAPACITOR, CERAMIC CHIP (1005), GRM155B11E103K
U03AS MAIN (PE0630)		C9543	75009881	CAPACITOR, CERAMIC CHIP (2012), C2012JB1A106KT
U03AS MAIN (PE0630)		C9544	75012557	CAPACITOR, CERA CHIP, 50V JB 102K 1005 SIZE, C100
U03AS MAIN (PE0630)		C9545	75009928	CAPACITOR, CERAMIC CHIP (1608), CM105B474K10AT
U03AS MAIN (PE0630)		C9546	75009867	CAPACITOR, CERAMIC CHIP (1005), CM05B104K10AH
U03AS MAIN (PE0630)		C9547	75009867	CAPACITOR, CERAMIC CHIP (1005), CM05B104K10AH
U03AS MAIN (PE0630)		C9548	75009867	CAPACITOR, CERAMIC CHIP (1005), CM05B104K10AH
U03AS MAIN (PE0630)		C9549	75009867	CAPACITOR, CERAMIC CHIP (1005), CM05B104K10AH
U03AS MAIN (PE0630)		C9550	75009867	CAPACITOR, CERAMIC CHIP (1005), CM05B104K10AH
U03AS MAIN (PE0630)		C9551	75010503	CAPACITOR, CERAMIC CHIP (1005), GRM1552C1H471J
U03AS MAIN (PE0630)		C9552	75008346	CAPACITOR, CERAMIC CHIP(1005), GRM155B31A334KE
U03AS MAIN (PE0630)		C9553	75009881	CAPACITOR, CERAMIC CHIP (2012), C2012JB1A106KT
U03AS MAIN (PE0630)		C9554	75009881	CAPACITOR, CERAMIC CHIP (2012), C2012JB1A106KT
U03AS MAIN (PE0630)		C9555	75009881	CAPACITOR, CERAMIC CHIP (2012), C2012JB1A106KT
U03AS MAIN (PE0630)		C9556	75009881	CAPACITOR, CERAMIC CHIP (2012), C2012JB1A106KT
U03AS MAIN (PE0630)		C9557	75010503	CAPACITOR, CERAMIC CHIP (1005), GRM1552C1H471J
U03AS MAIN (PE0630)		C9558	75008346	CAPACITOR, CERAMIC CHIP(1005), GRM155B31A334KE
U03AS MAIN (PE0630)		C9559	75009876	CAPACITOR, CERAMIC CHIP (1608), GRM188B31C105K
U03AS MAIN (PE0630)		C9560	75009239	CAPACITOR, CERAMIC CHIP(1608), CM105W5R222K50A
U03AS MAIN (PE0630)		C9561	75009867	CAPACITOR, CERAMIC CHIP (1005), CM05B104K10AH
U03AS MAIN (PE0630)		C9562	75009867	CAPACITOR, CERAMIC CHIP (1005), CM05B104K10AH
U03AS MAIN (PE0630)		C9563	75009867	CAPACITOR, CERAMIC CHIP (1005), CM05B104K10AH
U03AS MAIN (PE0630)		C9564	75009867	CAPACITOR, CERAMIC CHIP (1005), CM05B104K10AH
U03AS MAIN (PE0630)		C9565	75009867	CAPACITOR, CERAMIC CHIP (1005), CM05B104K10AH
U03AS MAIN (PE0630)		C9566	75009932	CAPACITOR, CARAMIC CHIP (1005), CM05W5R561K50A
U03AS MAIN (PE0630)		C9601	75009882	CAPACITOR, CERAMIC CHIP (3216), C3216JB1C106KT
U03AS MAIN (PE0630)		C9602	75009882	CAPACITOR, CERAMIC CHIP (3216), C3216JB1C106KT
U03AS MAIN (PE0630)		C9603	75009853	CAPACITOR, CERAMIC CHIP (1608), CM105W5R103K50
U03AS MAIN (PE0630)		C9604	75009881	CAPACITOR, CERAMIC CHIP (2012), C2012JB1A106KT
U03AS MAIN (PE0630)		C9605	75009881	CAPACITOR, CERAMIC CHIP (2012), C2012JB1A106KT
U03AS MAIN (PE0630)		C9606	75009881	CAPACITOR, CERAMIC CHIP (2012), C2012JB1A106KT
U03AS MAIN (PE0630)		C9607	75009881	CAPACITOR, CERAMIC CHIP (2012), C2012JB1A106KT
U03AS MAIN (PE0630)		C9609	75009867	CAPACITOR, CERAMIC CHIP (1005), CM05B104K10AH
U03AS MAIN (PE0630)		C9611	75009873	CAPACITOR, CERAMIC CHIP (1608), GRM188B31A225K
U03AS MAIN (PE0630)		C9612	75009867	CAPACITOR, CERAMIC CHIP (1005), CM05B104K10AH
U03AS MAIN (PE0630)		C9613	75009929	CAPACITOR, CERAMIC CHIP (2012), C2012JF1H105ZT
U03AS MAIN (PE0630)		C9614	75009929	CAPACITOR, CERAMIC CHIP (2012), C2012JF1H105ZT
U03AS MAIN (PE0630)		C9618	75010714	CAPACITOR, CERAMIC CHIP (1005), GRM155B11H472K
U03AS MAIN (PE0630)		C9620	75009856	CAPACITOR, CERAMIC CHIP (1608), CM105W5R104K16
U03AS MAIN (PE0630)		C9621	75009876	CAPACITOR, CERAMIC CHIP (1608), GRM188B31C105K
U03AS MAIN (PE0630)		C9622	75009876	CAPACITOR, CERAMIC CHIP (1608), GRM188B31C105K
U03AS MAIN (PE0630)		C9649	75009875	CAPACITOR, CERAMIC CHIP (1608), GRM188B31H104K
U03AS MAIN (PE0630)		C9650	75009869	CAPACITOR, CERAMIC CHIP (1005), CM05X5R105K06A

U03AS MAIN (PE0630)		C9651	75009863	CAPACITOR, CERAMIC CHIP (1005), CM05W5R103K16A
U03AS MAIN (PE0630)		D1100	75010721	DIODE, ZENER, 02CZ6.2-Y(TE85R, F)
U03AS MAIN (PE0630)		D1101	75010721	DIODE, ZENER, 02CZ6.2-Y(TE85R, F)
U03AS MAIN (PE0630)		D1301	75010608	DIODE, 1SS388(TPH3, F)
U03AS MAIN (PE0630)		D1302	75010608	DIODE, 1SS388(TPH3, F)
U03AS MAIN (PE0630)		D1303	75010153	DIODE, ZENER, UDZSTE-176.2B
U03AS MAIN (PE0630)		D1304	75010153	DIODE, ZENER, UDZSTE-176.2B
U03AS MAIN (PE0630)		D1701	75010721	DIODE, ZENER, 02CZ6.2-Y(TE85R, F)
U03AS MAIN (PE0630)		D2105	75009899	DIODE, MA112-(TX)
U03AS MAIN (PE0630)		D2106	75009899	DIODE, MA112-(TX)
U03AS MAIN (PE0630)		D2201	75009899	DIODE, MA112-(TX)
U03AS MAIN (PE0630)		D2202	75009899	DIODE, MA112-(TX)
U03AS MAIN (PE0630)		D2800	75009899	DIODE, MA112-(TX)
U03AS MAIN (PE0630)		D6000	75011229	DIODE, ZENER, MAZS05100L
U03AS MAIN (PE0630)		D6002	75011229	DIODE, ZENER, MAZS05100L
U03AS MAIN (PE0630)		D6102	75012089	DIODE, MA2J11100L
U03AS MAIN (PE0630)		D6103	75012089	DIODE, MA2J11100L
U03AS MAIN (PE0630)		D6104	75012089	DIODE, MA2J11100L
U03AS MAIN (PE0630)		D6105	75012089	DIODE, MA2J11100L
U03AS MAIN (PE0630)		D6106	75012089	DIODE, MA2J11100L
U03AS MAIN (PE0630)		D6107	75012089	DIODE, MA2J11100L
U03AS MAIN (PE0630)		D6110	23357790	DIODE, ZENER, MA8220-M
U03AS MAIN (PE0630)		D6111	75012089	DIODE, MA2J11100L
U03AS MAIN (PE0630)		D6112	75012089	DIODE, MA2J11100L
U03AS MAIN (PE0630)		D6301	75009899	DIODE, MA112-(TX)
U03AS MAIN (PE0630)		D6302	75009899	DIODE, MA112-(TX)
U03AS MAIN (PE0630)		D6303	75009899	DIODE, MA112-(TX)
U03AS MAIN (PE0630)		D6304	75009899	DIODE, MA112-(TX)
U03AS MAIN (PE0630)		D6401	75012089	DIODE, MA2J11100L
U03AS MAIN (PE0630)		D6402	75012089	DIODE, MA2J11100L
U03AS MAIN (PE0630)		D6403	75012089	DIODE, MA2J11100L
U03AS MAIN (PE0630)		D6404	75012089	DIODE, MA2J11100L
U03AS MAIN (PE0630)		D9501	75009899	DIODE, MA112-(TX)
U03AS MAIN (PE0630)		D9502	75009899	DIODE, MA112-(TX)
U03AS MAIN (PE0630)		D9503	75009328	DIODE, RB055L-40
U03AS MAIN (PE0630)		D9505	75009900	DIODE, RB070M-30TFTR
U03AS MAIN (PE0630)		D9506	75009900	DIODE, RB070M-30TFTR
U03AS MAIN (PE0630)		D9508	75009899	DIODE, MA112-(TX)
U03AS MAIN (PE0630)		D9509	75009899	DIODE, MA112-(TX)
U03AS MAIN (PE0630)		D9601	75009328	DIODE, RB055L-40
U03AS MAIN (PE0630)		D9611	75010888	DIODE, RB160VA-40TR
U03AS MAIN (PE0630)		D9633	75008353	DIODE, 1SS352(TPH3, F)
U03AS MAIN (PE0630)		FL100	75003411	CHIP BEAD INDUCTOR, 220OHM 1.5A, FB MH1608HM22
U03AS MAIN (PE0630)		FL150	75003115	CHIP BEAD INDUCTOR, 220OHM 2.0A, BKP2125 HS221-
U03AS MAIN (PE0630)		FL151	75003112	CHIP BEAD INDUCTOR, 1.0KOHM 0.3A, BK1608 HS102-
U03AS MAIN (PE0630)		FL152	75003112	CHIP BEAD INDUCTOR, 1.0KOHM 0.3A, BK1608 HS102-
U03AS MAIN (PE0630)		FL153	75003114	CHIP BEAD INDUCTOR, 120OHMX4 0.2A, BK3216 4S121

U03AS MAIN (PE0630)		FL154	75003113	CHIP BEAD INDUCTOR, 120OHM 0.5A, BK1608 HS121-T
U03AS MAIN (PE0630)		FL219	75010773	FILTER, SMD COMMON MODE, ACM2012-201-2P-T
U03AS MAIN (PE0630)		FL220	75010773	FILTER, SMD COMMON MODE, ACM2012-201-2P-T
U03AS MAIN (PE0630)		FL521	75003112	CHIP BEAD INDUCTOR, 1.0KOHM 0.3A, BK1608 HS102-
U03AS MAIN (PE0630)		FL522	75003112	CHIP BEAD INDUCTOR, 1.0KOHM 0.3A, BK1608 HS102-
U03AS MAIN (PE0630)		FL523	75003112	CHIP BEAD INDUCTOR, 1.0KOHM 0.3A, BK1608 HS102-
U03AS MAIN (PE0630)		FL524	75003112	CHIP BEAD INDUCTOR, 1.0KOHM 0.3A, BK1608 HS102-
U03AS MAIN (PE0630)		FL525	75003112	CHIP BEAD INDUCTOR, 1.0KOHM 0.3A, BK1608 HS102-
U03AS MAIN (PE0630)		FL526	75003114	CHIP BEAD INDUCTOR, 120OHMX4 0.2A, BK3216 4S121
U03AS MAIN (PE0630)		FL702	75003410	CHIP BEAD INDUCTOR, 33OHM 4.0A, BKP2125 HS330-T
U03AS MAIN (PE0630)		FL800	75003115	CHIP BEAD INDUCTOR, 220OHM 2.0A, BKP2125 HS221-
U03AS MAIN (PE0630)		FL801	75003115	CHIP BEAD INDUCTOR, 220OHM 2.0A, BKP2125 HS221-
U03AS MAIN (PE0630)		FL851	75010717	FERRITE BEADS, CHIP, 700OHM 0.5A, BLM18EG601SN1
U03AS MAIN (PE0630)		FL852	75009837	JUMPER, CHIP 1608TYPE, CR1/16 000V PB(F)
U03AS MAIN (PE0630)		FL853	75009837	JUMPER, CHIP 1608TYPE, CR1/16 000V PB(F)
U03AS MAIN (PE0630)		FL854	75009837	JUMPER, CHIP 1608TYPE, CR1/16 000V PB(F)
U03AS MAIN (PE0630)		FL900	75012564	FILTER, COMMON MODE, TCM2010L-131-4P-T000
U03AS MAIN (PE0630)		FL901	75012564	FILTER, COMMON MODE, TCM2010L-131-4P-T000
U03AS MAIN (PE0630)		FL902	75012564	FILTER, COMMON MODE, TCM2010L-131-4P-T000
U03AS MAIN (PE0630)		FL950	75003115	CHIP BEAD INDUCTOR, 220OHM 2.0A, BKP2125 HS221-
U03AS MAIN (PE0630)		FL951	75003115	CHIP BEAD INDUCTOR, 220OHM 2.0A, BKP2125 HS221-
U03AS MAIN (PE0630)		FL952	75003115	CHIP BEAD INDUCTOR, 220OHM 2.0A, BKP2125 HS221-
U03AS MAIN (PE0630)		FL953	75003115	CHIP BEAD INDUCTOR, 220OHM 2.0A, BKP2125 HS221-
U03AS MAIN (PE0630)		FL954	75003115	CHIP BEAD INDUCTOR, 220OHM 2.0A, BKP2125 HS221-
U03AS MAIN (PE0630)		FL955	75003115	CHIP BEAD INDUCTOR, 220OHM 2.0A, BKP2125 HS221-
U03AS MAIN (PE0630)		FL956	75003117	CHIP BEAD INDUCTOR, 180OHM 1.5A, BKP1608 HS181-
U03AS MAIN (PE0630)		FL957	75003115	CHIP BEAD INDUCTOR, 220OHM 2.0A, BKP2125 HS221-
U03AS MAIN (PE0630)		FL958	75003115	CHIP BEAD INDUCTOR, 220OHM 2.0A, BKP2125 HS221-
U03AS MAIN (PE0630)		FL959	75003115	CHIP BEAD INDUCTOR, 220OHM 2.0A, BKP2125 HS221-
U03AS MAIN (PE0630)		FL960	75003115	CHIP BEAD INDUCTOR, 220OHM 2.0A, BKP2125 HS221-
U03AS MAIN (PE0630)		FL961	75003115	CHIP BEAD INDUCTOR, 220OHM 2.0A, BKP2125 HS221-
U03AS MAIN (PE0630)		FL962	75009852	CAPACITOR CERAMIC CHIP, 25V 104S
U03AS MAIN (PE0630)		FL963	75003115	CHIP BEAD INDUCTOR, 220OHM 2.0A, BKP2125 HS221-
U03AS MAIN (PE0630)		FL964	75003115	CHIP BEAD INDUCTOR, 220OHM 2.0A, BKP2125 HS221-
U03AS MAIN (PE0630)		FL965	75003115	CHIP BEAD INDUCTOR, 220OHM 2.0A, BKP2125 HS221-
U03AS MAIN (PE0630)		FL966	75009240	CAPACITOR, THREE TERMINAL CHIP, CKD510JB1A105S
U03AS MAIN (PE0630)		FL967	75009837	JUMPER, CHIP 1608TYPE, CR1/16 000V PB(F)
U03AS MAIN (PE0630)		FL968	75009837	JUMPER, CHIP 1608TYPE, CR1/16 000V PB(F)
U03AS MAIN (PE0630)		FL969	75009837	JUMPER, CHIP 1608TYPE, CR1/16 000V PB(F)
U03AS MAIN (PE0630)		FL970	75003115	CHIP BEAD INDUCTOR, 220OHM 2.0A, BKP2125 HS221-
U03AS MAIN (PE0630)		FL971	75003115	CHIP BEAD INDUCTOR, 220OHM 2.0A, BKP2125 HS221-
U03AS MAIN (PE0630)		FL974	75009943	INDUCTOR, CHIP BEADS (1608), MPZ1608S221AT
U03AS MAIN (PE0630)		FL975	75009240	CAPACITOR, THREE TERMINAL CHIP, CKD510JB1A105S
U03AS MAIN (PE0630)		FL976	75009943	INDUCTOR, CHIP BEADS (1608), MPZ1608S221AT
U03AS MAIN (PE0630)		FL977	75009240	CAPACITOR, THREE TERMINAL CHIP, CKD510JB1A105S
U03AS MAIN (PE0630)		FL978	75008351	INDUCTOR, CHIP BEADS(1608), MPZ1608S300AT
U03AS MAIN (PE0630)		FL980	75010306	BEADS INDUCTOR, CHIP (2012), MPZ2012S221AT

U03AS MAIN (PE0630)		FL981	75010306	BEADS INDUCTOR, CHIP (2012), MPZ2012S221AT
U03AS MAIN (PE0630)		IC100	75012569	IC, TM2338AL-LF
U03AS MAIN (PE0630)		IC150	75010726	IC, AT25DF321-SU
U03AS MAIN (PE0630)		IC151	75010726	IC, AT25DF321-SU
U03AS MAIN (PE0630)		IC152	75009046	IC, AT24C64CN-SH-T
U03AS MAIN (PE0630)		IC153	75012570	IC, PST3528NR
U03AS MAIN (PE0630)		IC160	75008355	IC, HY5DU561622ETP-4-C
U03AS MAIN (PE0630)		IC170	75012623	IC, M62320FP#DF5G
U03AS MAIN (PE0630)		IC171	75012623	IC, M62320FP#DF5G
U03AS MAIN (PE0630)		IC172	75012623	IC, M62320FP#DF5G
U03AS MAIN (PE0630)		IC200	75012567	IC, TC74HC4052A
U03AS MAIN (PE0630)		IC271	23085823	IC, MM1508XNRE
U03AS MAIN (PE0630)		IC272	23085823	IC, MM1508XNRE
U03AS MAIN (PE0630)		IC330	75008004	IC, CXB1444R-T6
U03AS MAIN (PE0630)		IC340	75011915	IC, M24C02-WMN6TP
U03AS MAIN (PE0630)		IC341	75012568	IC, TC7WBL125AFK(T5L, F
U03AS MAIN (PE0630)		IC350	75009903	IC, TC7SET08FU(TE85L, F
U03AS MAIN (PE0630)		IC351	75009903	IC, TC7SET08FU(TE85L, F
U03AS MAIN (PE0630)		IC387	75012571	IC, CAT24C08WI-GT3-H-RECV
U03AS MAIN (PE0630)		IC388	75008003	IC, TC7WB66FK(TE85L, F)
U03AS MAIN (PE0630)		IC602	75006542	IC, PQ033DNA1ZPH
U03AS MAIN (PE0630)		IC603	75009451	IC, STA333W13TR
U03AS MAIN (PE0630)		IC604	75010891	IC, TC7WBD125AFK(T5L, F
U03AS MAIN (PE0630)		IC610	75009908	IC, OP AMP, RC4580IPWR
U03AS MAIN (PE0630)		IC611	75009908	IC, OP AMP, RC4580IPWR
U03AS MAIN (PE0630)		IC641	75004445	IC, BH3544F-E2
U03AS MAIN (PE0630)		IC701	75012565	IC, TC74VHC244FK(EL, K)
U03AS MAIN (PE0630)		IC702	75012565	IC, TC74VHC244FK(EL, K)
U03AS MAIN (PE0630)		IC703	75012566	IC, TC74VHCT244AFK(E, K
U03AS MAIN (PE0630)		IC705	75012566	IC, TC74VHCT244AFK(E, K
U03AS MAIN (PE0630)		IC707	75012566	IC, TC74VHCT244AFK(E, K
U03AS MAIN (PE0630)		IC708	75012565	IC, TC74VHC244FK(EL, K)
U03AS MAIN (PE0630)		IC709	75012566	IC, TC74VHCT244AFK(E, K
U03AS MAIN (PE0630)		IC710	75012566	IC, TC74VHCT244AFK(E, K
U03AS MAIN (PE0630)		IC711	75001217	IC, TC7SH04FU
U03AS MAIN (PE0630)		IC712	75009954	IC, GATE, TC7W32FU(TE12L, F)
U03AS MAIN (PE0630)		IC713	75012566	IC, TC74VHCT244AFK(E, K
U03AS MAIN (PE0630)		IC714	75012565	IC, TC74VHC244FK(EL, K)
U03AS MAIN (PE0630)		IC716	75008688	IC, AAT4610AIGV-T1
U03AS MAIN (PE0630)		IC717	75009953	IC, GATE, TC7SH08FU(TE85L, F)
U03AS MAIN (PE0630)		IC781	75009953	IC, GATE, TC7SH08FU(TE85L, F)
U03AS MAIN (PE0630)		IC802	75011456	IC, DRX3975D-QI-B1
U03AS MAIN (PE0630)		IC921	75009902	IC, TC7SH86FU(TE85L, F)
U03AS MAIN (PE0630)		IC950	75010728	IC, PQ033ENA1ZPH
U03AS MAIN (PE0630)		IC951	75010728	IC, PQ033ENA1ZPH
U03AS MAIN (PE0630)		IC952	75010732	IC, MP2108DK-LF-Z
U03AS MAIN (PE0630)		IC953	75010732	IC, MP2108DK-LF-Z

U03AS MAIN (PE0630)		IC954	75010520	IC, MM1662GHBE
U03AS MAIN (PE0630)		IC955	75002293	IC, MM1661JHBE
U03AS MAIN (PE0630)		IC957	75002320	IC, TC7SH32FU(TE85L, F)
U03AS MAIN (PE0630)		IC960	75010898	IC, MP2367DNE-LF-Z
U03AS MAIN (PE0630)		IC961	75004806	IC, PQ6CU12X2APQ
U03AS MAIN (PE0630)		IC962	75005774	IC, R1154N090B-TR-F
U03AS MAIN (PE0630)		L1501	75003410	CHIP BEAD INDUCTOR, 33OHM 4.0A, BKP2125 HS330-T
U03AS MAIN (PE0630)		L1502	75003410	CHIP BEAD INDUCTOR, 33OHM 4.0A, BKP2125 HS330-T
U03AS MAIN (PE0630)		L2101	75009887	INDUCTOR, BEADS CHIP, BLM11A121SPT
U03AS MAIN (PE0630)		L2102	75009887	INDUCTOR, BEADS CHIP, BLM11A121SPT
U03AS MAIN (PE0630)		L2201	75009887	INDUCTOR, BEADS CHIP, BLM11A121SPT
U03AS MAIN (PE0630)		L2202	75009887	INDUCTOR, BEADS CHIP, BLM11A121SPT
U03AS MAIN (PE0630)		L2701	23103314	COIL, FILTER, TEM2028AH
U03AS MAIN (PE0630)		L2706	23246651	COIL, CHIP, TRF4100CG
U03AS MAIN (PE0630)		L6101	75008364	COIL, CHOKE, 22MMH M 1.7A, SLF7055T-220M1R7-3PF
U03AS MAIN (PE0630)		L6102	75008364	COIL, CHOKE, 22MMH M 1.7A, SLF7055T-220M1R7-3PF
U03AS MAIN (PE0630)		L6103	75008364	COIL, CHOKE, 22MMH M 1.7A, SLF7055T-220M1R7-3PF
U03AS MAIN (PE0630)		L6104	75008364	COIL, CHOKE, 22MMH M 1.7A, SLF7055T-220M1R7-3PF
U03AS MAIN (PE0630)		L6105	75008351	INDUCTOR, CHIP BEADS(1608), MPZ1608S300AT
U03AS MAIN (PE0630)		L6106	75010718	BEADS INDUCTOR, CHIP, BLM11A102SPT
U03AS MAIN (PE0630)		L6108	75010306	BEADS INDUCTOR, CHIP (2012), MPZ2012S221AT
U03AS MAIN (PE0630)		L8501	23248385	COIL, CHOKE, TLN3278AA
U03AS MAIN (PE0630)		L9016	75003410	CHIP BEAD INDUCTOR, 33OHM 4.0A, BKP2125 HS330-T
U03AS MAIN (PE0630)		L9020	75003410	CHIP BEAD INDUCTOR, 33OHM 4.0A, BKP2125 HS330-T
U03AS MAIN (PE0630)		L9021	75003411	CHIP BEAD INDUCTOR, 220OHM 1.5A, FB MH1608HM22
U03AS MAIN (PE0630)		L9022	75003411	CHIP BEAD INDUCTOR, 220OHM 1.5A, FB MH1608HM22
U03AS MAIN (PE0630)		L9023	75003411	CHIP BEAD INDUCTOR, 220OHM 1.5A, FB MH1608HM22
U03AS MAIN (PE0630)		L9026	75003411	CHIP BEAD INDUCTOR, 220OHM 1.5A, FB MH1608HM22
U03AS MAIN (PE0630)		L9027	75003411	CHIP BEAD INDUCTOR, 220OHM 1.5A, FB MH1608HM22
U03AS MAIN (PE0630)		L9028	75003411	CHIP BEAD INDUCTOR, 220OHM 1.5A, FB MH1608HM22
U03AS MAIN (PE0630)		L9029	75003410	CHIP BEAD INDUCTOR, 33OHM 4.0A, BKP2125 HS330-T
U03AS MAIN (PE0630)		L9501	75009884	INDUCTOR, CHIP, SLF7032T-4R7M1R7-2PF
U03AS MAIN (PE0630)		L9502	75009884	INDUCTOR, CHIP, SLF7032T-4R7M1R7-2PF
U03AS MAIN (PE0630)		L9601	75010980	COIL, CHOKE, 15MMH 3.1A, SLF10165T-150M3R13PF
U03AS MAIN (PE0630)		L9612	75010869	INDUCTOR, CHIP (3225), NLCV32T-680K-PF
U03AS MAIN (PE0630)		L9613	75010870	INDUCTOR, CHIP (3225), NLCV32T-2R2M-PF
U03AS MAIN (PE0630)		NB001	23961276	SOLDER CREAM
U03AS MAIN (PE0630)		NB002	23961260	ER M708E-3.0
U03AS MAIN (PE0630)		NB003	23961257	R M708E 400G
U03AS MAIN (PE0630)		NB004	23961293	S-1061SP-2 C
U03AS MAIN (PE0630)		NB005	23961265	M705ESC 1.0
U03AS MAIN (PE0630)		NB006	23961267	M705ESC 1.6
U03AS MAIN (PE0630)		NB007	23962411	AD EP 3609
U03AS MAIN (PE0630)		NB008	23964124	SOL #4520 UN
U03AS MAIN (PE0630)		P150A	75010719	CONNECTOR, 87BFN-030S-1F
U03AS MAIN (PE0630)		P322A	75010374	CONNECTOR, BM31B-SHLVS-G-TBT(LF)(SN)
U03AS MAIN (PE0630)		P521A	75010879	CONNECTOR, B12B-PH-K-S(LF)(SN)

U03AS MAIN (PE0630)		P601	75002147	CONNECTOR, B4B-EH(LF)
U03AS MAIN (PE0630)		P6061	23365444	EARPHONE JACK, D3.5
U03AS MAIN (PE0630)		P810B	75007618	CONNECTOR, 2.0MM PITCH NYLON, B9B-PH-K-S(LF)(SI
U03AS MAIN (PE0630)		P811B	75008267	CONNECTOR, W-B 2.0MM 14P VERTICAL, B14B-PH-K-S
U03AS MAIN (PE0630)		P920A	75009892	CONNECTOR, 2MM PITCH W TO B, B7B-PH-K-S(LF)
U03AS MAIN (PE0630)		PB03A	V28A000822A1	PC BOARD 32AV555D_MAIN_PE0630
U03AS MAIN (PE0630)		PJ700	75012538	SOCKET, PCMCIA, TV51EE20090
U03AS MAIN (PE0630)		PV201	75001989	CONNECTOR, MULTI 21P, CSS5021-9C01F
U03AS MAIN (PE0630)		PV202	75001989	CONNECTOR, MULTI 21P, CSS5021-9C01F
U03AS MAIN (PE0630)		PV240	75001872	PIN JACK, 10/10P ST
U03AS MAIN (PE0630)		PV320	75011085	CONNECTOR, CSS5019-4K31F
U03AS MAIN (PE0630)		PV321	75011085	CONNECTOR, CSS5019-4K31F
U03AS MAIN (PE0630)		Q1001	75009815	TRANSISTOR, 2SC4116-Y(TE85L, F)
U03AS MAIN (PE0630)		Q1002	75009897	TRANSISTOR, 2SA1586-Y(TE85L, F)
U03AS MAIN (PE0630)		Q1301	75001961	TRANSISTOR, FET, 2SK2035(TE85L, F)
U03AS MAIN (PE0630)		Q1302	75001961	TRANSISTOR, FET, 2SK2035(TE85L, F)
U03AS MAIN (PE0630)		Q1501	75009815	TRANSISTOR, 2SC4116-Y(TE85L, F)
U03AS MAIN (PE0630)		Q1502	75009815	TRANSISTOR, 2SC4116-Y(TE85L, F)
U03AS MAIN (PE0630)		Q1503	75009815	TRANSISTOR, 2SC4116-Y(TE85L, F)
U03AS MAIN (PE0630)		Q1701	75009815	TRANSISTOR, 2SC4116-Y(TE85L, F)
U03AS MAIN (PE0630)		Q1702	75009815	TRANSISTOR, 2SC4116-Y(TE85L, F)
U03AS MAIN (PE0630)		Q1703	75009815	TRANSISTOR, 2SC4116-Y(TE85L, F)
U03AS MAIN (PE0630)		Q1704	75009815	TRANSISTOR, 2SC4116-Y(TE85L, F)
U03AS MAIN (PE0630)		Q2105	75007621	TRANSISTOR, 2SC3326-B(TE85R, F)
U03AS MAIN (PE0630)		Q2106	75007621	TRANSISTOR, 2SC3326-B(TE85R, F)
U03AS MAIN (PE0630)		Q2107	75007621	TRANSISTOR, 2SC3326-B(TE85R, F)
U03AS MAIN (PE0630)		Q2108	75007621	TRANSISTOR, 2SC3326-B(TE85R, F)
U03AS MAIN (PE0630)		Q2109	75006019	TRANSISTOR, RN2404(TE85L, F)
U03AS MAIN (PE0630)		Q2201	75007621	TRANSISTOR, 2SC3326-B(TE85R, F)
U03AS MAIN (PE0630)		Q2202	75007621	TRANSISTOR, 2SC3326-B(TE85R, F)
U03AS MAIN (PE0630)		Q2203	75007621	TRANSISTOR, 2SC3326-B(TE85R, F)
U03AS MAIN (PE0630)		Q2204	75007621	TRANSISTOR, 2SC3326-B(TE85R, F)
U03AS MAIN (PE0630)		Q2205	75006019	TRANSISTOR, RN2404(TE85L, F)
U03AS MAIN (PE0630)		Q2206	75002029	TRANSISTOR, 2SC4081
U03AS MAIN (PE0630)		Q2701	75007619	TRANSISTOR, 2SA1162-Y(TE85R, F)
U03AS MAIN (PE0630)		Q2702	75009895	TRANSISTOR, RN1404(TE85L, F)
U03AS MAIN (PE0630)		Q2703	75009895	TRANSISTOR, RN1404(TE85L, F)
U03AS MAIN (PE0630)		Q2711	75007619	TRANSISTOR, 2SA1162-Y(TE85R, F)
U03AS MAIN (PE0630)		Q2712	75009895	TRANSISTOR, RN1404(TE85L, F)
U03AS MAIN (PE0630)		Q2713	75009895	TRANSISTOR, RN1404(TE85L, F)
U03AS MAIN (PE0630)		Q2803	75009897	TRANSISTOR, 2SA1586-Y(TE85L, F)
U03AS MAIN (PE0630)		Q2804	75009897	TRANSISTOR, 2SA1586-Y(TE85L, F)
U03AS MAIN (PE0630)		Q2805	75009815	TRANSISTOR, 2SC4116-Y(TE85L, F)
U03AS MAIN (PE0630)		Q2806	75009815	TRANSISTOR, 2SC4116-Y(TE85L, F)
U03AS MAIN (PE0630)		Q6000	75009815	TRANSISTOR, 2SC4116-Y(TE85L, F)
U03AS MAIN (PE0630)		Q6101	75009815	TRANSISTOR, 2SC4116-Y(TE85L, F)
U03AS MAIN (PE0630)		Q6301	75002029	TRANSISTOR, 2SC4081

U03AS MAIN (PE0630)		Q6302	75002029	TRANSISTOR, 2SC4081
U03AS MAIN (PE0630)		Q6303	75002029	TRANSISTOR, 2SC4081
U03AS MAIN (PE0630)		Q6304	75006019	TRANSISTOR, RN2404(TE85L, F)
U03AS MAIN (PE0630)		Q6305	75006019	TRANSISTOR, RN2404(TE85L, F)
U03AS MAIN (PE0630)		Q6306	75007619	TRANSISTOR, 2SA1162-Y(TE85R, F)
U03AS MAIN (PE0630)		Q6401	75009815	TRANSISTOR, 2SC4116-Y(TE85L, F)
U03AS MAIN (PE0630)		Q8501	75009815	TRANSISTOR, 2SC4116-Y(TE85L, F)
U03AS MAIN (PE0630)		Q8502	75009815	TRANSISTOR, 2SC4116-Y(TE85L, F)
U03AS MAIN (PE0630)		Q8503	75009815	TRANSISTOR, 2SC4116-Y(TE85L, F)
U03AS MAIN (PE0630)		Q9500	75009815	TRANSISTOR, 2SC4116-Y(TE85L, F)
U03AS MAIN (PE0630)		Q9501	75009946	TRANSISTOR, FET, FDC602P_NF40
U03AS MAIN (PE0630)		Q9601	75001962	TRANSISTOR, DTC144EUAT106
U03AS MAIN (PE0630)		Q9602	75002029	TRANSISTOR, 2SC4081
U03AS MAIN (PE0630)		Q9621	75010885	TRANSISTOR, RN2403(TE85L, F)
U03AS MAIN (PE0630)		Q9622	75009895	TRANSISTOR, RN1404(TE85L, F)
U03AS MAIN (PE0630)		Q9623	75009815	TRANSISTOR, 2SC4116-Y(TE85L, F)
U03AS MAIN (PE0630)		Q9624	23205583	TRANSISTOR, FET, RSQ035P03TR
U03AS MAIN (PE0630)		R1001	75009835	RESISTOR, CHIP (1005), CR1/16S 560JV PB(F)
U03AS MAIN (PE0630)		R1002	75009835	RESISTOR, CHIP (1005), CR1/16S 560JV PB(F)
U03AS MAIN (PE0630)		R1003	75009835	RESISTOR, CHIP (1005), CR1/16S 560JV PB(F)
U03AS MAIN (PE0630)		R1004	75009835	RESISTOR, CHIP (1005), CR1/16S 560JV PB(F)
U03AS MAIN (PE0630)		R1005	75009850	RESISTOR, CHIP (1005), CR1/16S 103JV PB(F)
U03AS MAIN (PE0630)		R1006	75009845	RESISTOR, CHIP (1005), CR1/16S 471JV PB(F)
U03AS MAIN (PE0630)		R1007	75009835	RESISTOR, CHIP (1005), CR1/16S 560JV PB(F)
U03AS MAIN (PE0630)		R1008	75009835	RESISTOR, CHIP (1005), CR1/16S 560JV PB(F)
U03AS MAIN (PE0630)		R1009	75009835	RESISTOR, CHIP (1005), CR1/16S 560JV PB(F)
U03AS MAIN (PE0630)		R1010	75009845	RESISTOR, CHIP (1005), CR1/16S 471JV PB(F)
U03AS MAIN (PE0630)		R1012	75012543	RESISTOR, CHIP(2012), CR1/10 272JV PB(F)
U03AS MAIN (PE0630)		R1013	75012548	RESISTOR, CHIP(1005), CR1/16S 391FV PB(F)
U03AS MAIN (PE0630)		R1014	75009835	RESISTOR, CHIP (1005), CR1/16S 560JV PB(F)
U03AS MAIN (PE0630)		R1015	75009835	RESISTOR, CHIP (1005), CR1/16S 560JV PB(F)
U03AS MAIN (PE0630)		R1016	75009835	RESISTOR, CHIP (1005), CR1/16S 560JV PB(F)
U03AS MAIN (PE0630)		R1017	75009835	RESISTOR, CHIP (1005), CR1/16S 560JV PB(F)
U03AS MAIN (PE0630)		R1018	75009835	RESISTOR, CHIP (1005), CR1/16S 560JV PB(F)
U03AS MAIN (PE0630)		R1019	75009835	RESISTOR, CHIP (1005), CR1/16S 560JV PB(F)
U03AS MAIN (PE0630)		R1020	75009835	RESISTOR, CHIP (1005), CR1/16S 560JV PB(F)
U03AS MAIN (PE0630)		R1021	75009843	RESISTOR, CHIP (1005), CR1/16S 470JV PB(F)
U03AS MAIN (PE0630)		R1022	75009843	RESISTOR, CHIP (1005), CR1/16S 470JV PB(F)
U03AS MAIN (PE0630)		R1023	75009845	RESISTOR, CHIP (1005), CR1/16S 471JV PB(F)
U03AS MAIN (PE0630)		R1026	75012549	RESISTOR, CHIP(1005), CR1/16S 201DV PB(F)
U03AS MAIN (PE0630)		R1027	75011425	RESISTOR, CHIP (1005), CR1/16S 181DV PB(F)
U03AS MAIN (PE0630)		R1028	75007593	RESISTOR, CHIP(1005), ERJ2RKF33R0X
U03AS MAIN (PE0630)		R1100	75009834	RESISTOR, CHIP (1005), CR1/16S 103JV PB(F)
U03AS MAIN (PE0630)		R1101	75009834	RESISTOR, CHIP (1005), CR1/16S 103JV PB(F)
U03AS MAIN (PE0630)		R1102	75009834	RESISTOR, CHIP (1005), CR1/16S 103JV PB(F)
U03AS MAIN (PE0630)		R1103	75005803	RESISTOR, CHIP, 1005 CR1/16S 123JV PB(F)
U03AS MAIN (PE0630)		R1104	75009834	RESISTOR, CHIP (1005), CR1/16S 103JV PB(F)

U03AS MAIN (PE0630)		R1105	75005803	RESISTOR, CHIP, 1005 CR1/16S 123JV PB(F)
U03AS MAIN (PE0630)		R1106	75005803	RESISTOR, CHIP, 1005 CR1/16S 123JV PB(F)
U03AS MAIN (PE0630)		R1107	75009834	RESISTOR, CHIP (1005), CR1/16S 103JV PB(F)
U03AS MAIN (PE0630)		R1108	75009834	RESISTOR, CHIP (1005), CR1/16S 103JV PB(F)
U03AS MAIN (PE0630)		R1109	75009834	RESISTOR, CHIP (1005), CR1/16S 103JV PB(F)
U03AS MAIN (PE0630)		R1110	75005803	RESISTOR, CHIP, 1005 CR1/16S 123JV PB(F)
U03AS MAIN (PE0630)		R1111	75009834	RESISTOR, CHIP (1005), CR1/16S 103JV PB(F)
U03AS MAIN (PE0630)		R1112	75005803	RESISTOR, CHIP, 1005 CR1/16S 123JV PB(F)
U03AS MAIN (PE0630)		R1113	75005803	RESISTOR, CHIP, 1005 CR1/16S 123JV PB(F)
U03AS MAIN (PE0630)		R1114	75005803	RESISTOR, CHIP, 1005 CR1/16S 123JV PB(F)
U03AS MAIN (PE0630)		R1115	75005803	RESISTOR, CHIP, 1005 CR1/16S 123JV PB(F)
U03AS MAIN (PE0630)		R1116	75009844	RESISTOR, CHIP (1005), CR1/16S 101JV PB(F)
U03AS MAIN (PE0630)		R1118	75009844	RESISTOR, CHIP (1005), CR1/16S 101JV PB(F)
U03AS MAIN (PE0630)		R1119	75009844	RESISTOR, CHIP (1005), CR1/16S 101JV PB(F)
U03AS MAIN (PE0630)		R1120	75009844	RESISTOR, CHIP (1005), CR1/16S 101JV PB(F)
U03AS MAIN (PE0630)		R1121	75009844	RESISTOR, CHIP (1005), CR1/16S 101JV PB(F)
U03AS MAIN (PE0630)		R1122	75009844	RESISTOR, CHIP (1005), CR1/16S 101JV PB(F)
U03AS MAIN (PE0630)		R1124	75009844	RESISTOR, CHIP (1005), CR1/16S 101JV PB(F)
U03AS MAIN (PE0630)		R1125	75009844	RESISTOR, CHIP (1005), CR1/16S 101JV PB(F)
U03AS MAIN (PE0630)		R1126	75010119	RESISTOR, CHIP (1608), CR1/16 223JV PB(F)
U03AS MAIN (PE0630)		R1127	75010119	RESISTOR, CHIP (1608), CR1/16 223JV PB(F)
U03AS MAIN (PE0630)		R1130	75009844	RESISTOR, CHIP (1005), CR1/16S 101JV PB(F)
U03AS MAIN (PE0630)		R1131	75009844	RESISTOR, CHIP (1005), CR1/16S 101JV PB(F)
U03AS MAIN (PE0630)		R1132	75009844	RESISTOR, CHIP (1005), CR1/16S 101JV PB(F)
U03AS MAIN (PE0630)		R1133	75009844	RESISTOR, CHIP (1005), CR1/16S 101JV PB(F)
U03AS MAIN (PE0630)		R1137	75010119	RESISTOR, CHIP (1608), CR1/16 223JV PB(F)
U03AS MAIN (PE0630)		R1138	75010119	RESISTOR, CHIP (1608), CR1/16 223JV PB(F)
U03AS MAIN (PE0630)		R1139	75010119	RESISTOR, CHIP (1608), CR1/16 223JV PB(F)
U03AS MAIN (PE0630)		R1140	75010119	RESISTOR, CHIP (1608), CR1/16 223JV PB(F)
U03AS MAIN (PE0630)		R1203	75009844	RESISTOR, CHIP (1005), CR1/16S 101JV PB(F)
U03AS MAIN (PE0630)		R1204	75009844	RESISTOR, CHIP (1005), CR1/16S 101JV PB(F)
U03AS MAIN (PE0630)		R1205	75009844	RESISTOR, CHIP (1005), CR1/16S 101JV PB(F)
U03AS MAIN (PE0630)		R1206	75009844	RESISTOR, CHIP (1005), CR1/16S 101JV PB(F)
U03AS MAIN (PE0630)		R1207	75009844	RESISTOR, CHIP (1005), CR1/16S 101JV PB(F)
U03AS MAIN (PE0630)		R1208	75009844	RESISTOR, CHIP (1005), CR1/16S 101JV PB(F)
U03AS MAIN (PE0630)		R1209	75009844	RESISTOR, CHIP (1005), CR1/16S 101JV PB(F)
U03AS MAIN (PE0630)		R1210	75009844	RESISTOR, CHIP (1005), CR1/16S 101JV PB(F)
U03AS MAIN (PE0630)		R1211	75009844	RESISTOR, CHIP (1005), CR1/16S 101JV PB(F)
U03AS MAIN (PE0630)		R1212	75009844	RESISTOR, CHIP (1005), CR1/16S 101JV PB(F)
U03AS MAIN (PE0630)		R1213	75009844	RESISTOR, CHIP (1005), CR1/16S 101JV PB(F)
U03AS MAIN (PE0630)		R1214	75009844	RESISTOR, CHIP (1005), CR1/16S 101JV PB(F)
U03AS MAIN (PE0630)		R1215	75009844	RESISTOR, CHIP (1005), CR1/16S 101JV PB(F)
U03AS MAIN (PE0630)		R1216	75009844	RESISTOR, CHIP (1005), CR1/16S 101JV PB(F)
U03AS MAIN (PE0630)		R1217	75009844	RESISTOR, CHIP (1005), CR1/16S 101JV PB(F)
U03AS MAIN (PE0630)		R1218	75009840	RESISTOR, CHIP (1005), CR1/16S 102JV PB(F)
U03AS MAIN (PE0630)		R1219	75009850	RESISTOR, CHIP (1005), CR1/16S 103JV PB(F)
U03AS MAIN (PE0630)		R1220	75012543	RESISTOR, CHIP(2012), CR1/10 272JV PB(F)

U03AS MAIN (PE0630)		R1221	75008336	RESISTOR, CHIP(1005), CR1/16S 102JV PB(F)
U03AS MAIN (PE0630)		R1222	75008336	RESISTOR, CHIP(1005), CR1/16S 102JV PB(F)
U03AS MAIN (PE0630)		R1223	75008336	RESISTOR, CHIP(1005), CR1/16S 102JV PB(F)
U03AS MAIN (PE0630)		R1224	75009844	RESISTOR, CHIP (1005), CR1/16S 101JV PB(F)
U03AS MAIN (PE0630)		R1225	75009844	RESISTOR, CHIP (1005), CR1/16S 101JV PB(F)
U03AS MAIN (PE0630)		R1226	75009844	RESISTOR, CHIP (1005), CR1/16S 101JV PB(F)
U03AS MAIN (PE0630)		R1227	75009835	RESISTOR, CHIP (1005), CR1/16S 560JV PB(F)
U03AS MAIN (PE0630)		R1228	75009835	RESISTOR, CHIP (1005), CR1/16S 560JV PB(F)
U03AS MAIN (PE0630)		R1232	75009844	RESISTOR, CHIP (1005), CR1/16S 101JV PB(F)
U03AS MAIN (PE0630)		R1234	75007596	RESISTOR, CHIP(1005), CR1/16S 100JV PB(F)
U03AS MAIN (PE0630)		R1235	75007596	RESISTOR, CHIP(1005), CR1/16S 100JV PB(F)
U03AS MAIN (PE0630)		R1290	75007596	RESISTOR, CHIP(1005), CR1/16S 100JV PB(F)
U03AS MAIN (PE0630)		R1291	75007596	RESISTOR, CHIP(1005), CR1/16S 100JV PB(F)
U03AS MAIN (PE0630)		R1292	75007596	RESISTOR, CHIP(1005), CR1/16S 100JV PB(F)
U03AS MAIN (PE0630)		R1293	75007596	RESISTOR, CHIP(1005), CR1/16S 100JV PB(F)
U03AS MAIN (PE0630)		R1294	75007596	RESISTOR, CHIP(1005), CR1/16S 100JV PB(F)
U03AS MAIN (PE0630)		R1295	75007596	RESISTOR, CHIP(1005), CR1/16S 100JV PB(F)
U03AS MAIN (PE0630)		R1296	75007596	RESISTOR, CHIP(1005), CR1/16S 100JV PB(F)
U03AS MAIN (PE0630)		R1297	75007596	RESISTOR, CHIP(1005), CR1/16S 100JV PB(F)
U03AS MAIN (PE0630)		R1298	75007596	RESISTOR, CHIP(1005), CR1/16S 100JV PB(F)
U03AS MAIN (PE0630)		R1299	75007596	RESISTOR, CHIP(1005), CR1/16S 100JV PB(F)
U03AS MAIN (PE0630)		R1301	75009851	JUMPER, CHIP 1005TYPE, CR1/16S 000V PB(F)
U03AS MAIN (PE0630)		R1302	75009844	RESISTOR, CHIP (1005), CR1/16S 101JV PB(F)
U03AS MAIN (PE0630)		R1303	75009844	RESISTOR, CHIP (1005), CR1/16S 101JV PB(F)
U03AS MAIN (PE0630)		R1304	75009847	RESISTOR, CHIP (1005), CR1/16S 472JV PB(F)
U03AS MAIN (PE0630)		R1305	75009850	RESISTOR, CHIP (1005), CR1/16S 103JV PB(F)
U03AS MAIN (PE0630)		R1306	75009847	RESISTOR, CHIP (1005), CR1/16S 472JV PB(F)
U03AS MAIN (PE0630)		R1307	75009850	RESISTOR, CHIP (1005), CR1/16S 103JV PB(F)
U03AS MAIN (PE0630)		R1308	75010143	CHIP JUMPER, 1608TYPE, CR1/16 000V PB(F)
U03AS MAIN (PE0630)		R1310	75009834	RESISTOR, CHIP (1005), CR1/16S 103JV PB(F)
U03AS MAIN (PE0630)		R1311	75009847	RESISTOR, CHIP (1005), CR1/16S 472JV PB(F)
U03AS MAIN (PE0630)		R1312	75009847	RESISTOR, CHIP (1005), CR1/16S 472JV PB(F)
U03AS MAIN (PE0630)		R1313	75009844	RESISTOR, CHIP (1005), CR1/16S 101JV PB(F)
U03AS MAIN (PE0630)		R1314	75009844	RESISTOR, CHIP (1005), CR1/16S 101JV PB(F)
U03AS MAIN (PE0630)		R1315	75009844	RESISTOR, CHIP (1005), CR1/16S 101JV PB(F)
U03AS MAIN (PE0630)		R1316	75009844	RESISTOR, CHIP (1005), CR1/16S 101JV PB(F)
U03AS MAIN (PE0630)		R1317	75007596	RESISTOR, CHIP(1005), CR1/16S 100JV PB(F)
U03AS MAIN (PE0630)		R1318	75007596	RESISTOR, CHIP(1005), CR1/16S 100JV PB(F)
U03AS MAIN (PE0630)		R1319	75009844	RESISTOR, CHIP (1005), CR1/16S 101JV PB(F)
U03AS MAIN (PE0630)		R1320	75009840	RESISTOR, CHIP (1005), CR1/16S 102JV PB(F)
U03AS MAIN (PE0630)		R1321	75007984	RESISTOR, CHIP(1005), CR1/16S 105JV PB(F)
U03AS MAIN (PE0630)		R1322	75009842	RESISTOR, CHIP (1005), CR1/16S 330JV PB(F)
U03AS MAIN (PE0630)		R1323	75012553	RESISTOR, CHIP(1005), RK73H1ETTP9100F
U03AS MAIN (PE0630)		R1421	75009847	RESISTOR, CHIP (1005), CR1/16S 472JV PB(F)
U03AS MAIN (PE0630)		R1422	75009847	RESISTOR, CHIP (1005), CR1/16S 472JV PB(F)
U03AS MAIN (PE0630)		R1502	75009834	RESISTOR, CHIP (1005), CR1/16S 103JV PB(F)
U03AS MAIN (PE0630)		R1503	75009834	RESISTOR, CHIP (1005), CR1/16S 103JV PB(F)

U03AS MAIN (PE0630)		R1505	75009834	RESISTOR, CHIP (1005), CR1/16S 103JV PB(F)
U03AS MAIN (PE0630)		R1506	75008336	RESISTOR, CHIP(1005), CR1/16S 102JV PB(F)
U03AS MAIN (PE0630)		R1508	75008336	RESISTOR, CHIP(1005), CR1/16S 102JV PB(F)
U03AS MAIN (PE0630)		R1509	75009847	RESISTOR, CHIP (1005), CR1/16S 472JV PB(F)
U03AS MAIN (PE0630)		R1510	75009847	RESISTOR, CHIP (1005), CR1/16S 472JV PB(F)
U03AS MAIN (PE0630)		R1511	75005998	RESISTOR, CHIP (1005), CR1/16S 333JV PB(F)
U03AS MAIN (PE0630)		R1512	75009847	RESISTOR, CHIP (1005), CR1/16S 472JV PB(F)
U03AS MAIN (PE0630)		R1513	75008532	RESISTOR, CHIP(1005), CR1/16S 182JV PB(F)
U03AS MAIN (PE0630)		R1514	75005998	RESISTOR, CHIP (1005), CR1/16S 333JV PB(F)
U03AS MAIN (PE0630)		R1515	75005985	RESISTOR, CHIP (1005), CR1/16S 332JV PB(F)
U03AS MAIN (PE0630)		R1516	75007596	RESISTOR, CHIP(1005), CR1/16S 100JV PB(F)
U03AS MAIN (PE0630)		R1517	75007596	RESISTOR, CHIP(1005), CR1/16S 100JV PB(F)
U03AS MAIN (PE0630)		R1519	75009847	RESISTOR, CHIP (1005), CR1/16S 472JV PB(F)
U03AS MAIN (PE0630)		R1520	75009847	RESISTOR, CHIP (1005), CR1/16S 472JV PB(F)
U03AS MAIN (PE0630)		R1521	75009847	RESISTOR, CHIP (1005), CR1/16S 472JV PB(F)
U03AS MAIN (PE0630)		R1522	75009847	RESISTOR, CHIP (1005), CR1/16S 472JV PB(F)
U03AS MAIN (PE0630)		R1523	75009834	RESISTOR, CHIP (1005), CR1/16S 103JV PB(F)
U03AS MAIN (PE0630)		R1524	75008336	RESISTOR, CHIP(1005), CR1/16S 102JV PB(F)
U03AS MAIN (PE0630)		R1601	75009841	RESISTOR, CHIP (1005), CR1/16S 220JV PB(F)
U03AS MAIN (PE0630)		R1602	75009841	RESISTOR, CHIP (1005), CR1/16S 220JV PB(F)
U03AS MAIN (PE0630)		R1603	75009841	RESISTOR, CHIP (1005), CR1/16S 220JV PB(F)
U03AS MAIN (PE0630)		R1604	75009841	RESISTOR, CHIP (1005), CR1/16S 220JV PB(F)
U03AS MAIN (PE0630)		R1605	75009841	RESISTOR, CHIP (1005), CR1/16S 220JV PB(F)
U03AS MAIN (PE0630)		R1606	75009835	RESISTOR, CHIP (1005), CR1/16S 560JV PB(F)
U03AS MAIN (PE0630)		R1607	75009835	RESISTOR, CHIP (1005), CR1/16S 560JV PB(F)
U03AS MAIN (PE0630)		R1608	75009835	RESISTOR, CHIP (1005), CR1/16S 560JV PB(F)
U03AS MAIN (PE0630)		R1609	75009835	RESISTOR, CHIP (1005), CR1/16S 560JV PB(F)
U03AS MAIN (PE0630)		R1610	75012550	RESISTOR, CHIP(1005), CR1/16S 301DV PB(F)
U03AS MAIN (PE0630)		R1611	75009835	RESISTOR, CHIP (1005), CR1/16S 560JV PB(F)
U03AS MAIN (PE0630)		R1612	75009841	RESISTOR, CHIP (1005), CR1/16S 220JV PB(F)
U03AS MAIN (PE0630)		R1701	75009844	RESISTOR, CHIP (1005), CR1/16S 101JV PB(F)
U03AS MAIN (PE0630)		R1702	75009850	RESISTOR, CHIP (1005), CR1/16S 103JV PB(F)
U03AS MAIN (PE0630)		R1703	75009850	RESISTOR, CHIP (1005), CR1/16S 103JV PB(F)
U03AS MAIN (PE0630)		R1704	75009850	RESISTOR, CHIP (1005), CR1/16S 103JV PB(F)
U03AS MAIN (PE0630)		R1705	75009850	RESISTOR, CHIP (1005), CR1/16S 103JV PB(F)
U03AS MAIN (PE0630)		R1706	75009850	RESISTOR, CHIP (1005), CR1/16S 103JV PB(F)
U03AS MAIN (PE0630)		R1707	75009850	RESISTOR, CHIP (1005), CR1/16S 103JV PB(F)
U03AS MAIN (PE0630)		R1708	75009850	RESISTOR, CHIP (1005), CR1/16S 103JV PB(F)
U03AS MAIN (PE0630)		R1709	75009850	RESISTOR, CHIP (1005), CR1/16S 103JV PB(F)
U03AS MAIN (PE0630)		R1710	75009850	RESISTOR, CHIP (1005), CR1/16S 103JV PB(F)
U03AS MAIN (PE0630)		R1711	75009850	RESISTOR, CHIP (1005), CR1/16S 103JV PB(F)
U03AS MAIN (PE0630)		R1712	75009850	RESISTOR, CHIP (1005), CR1/16S 103JV PB(F)
U03AS MAIN (PE0630)		R1713	75009850	RESISTOR, CHIP (1005), CR1/16S 103JV PB(F)
U03AS MAIN (PE0630)		R1714	75009850	RESISTOR, CHIP (1005), CR1/16S 103JV PB(F)
U03AS MAIN (PE0630)		R1716	75009850	RESISTOR, CHIP (1005), CR1/16S 103JV PB(F)
U03AS MAIN (PE0630)		R1719	75009850	RESISTOR, CHIP (1005), CR1/16S 103JV PB(F)
U03AS MAIN (PE0630)		R1720	75009850	RESISTOR, CHIP (1005), CR1/16S 103JV PB(F)

U03AS MAIN (PE0630)		R1722	75009850	RESISTOR, CHIP (1005), CR1/16S 103JV PB(F)
U03AS MAIN (PE0630)		R1724	75009850	RESISTOR, CHIP (1005), CR1/16S 103JV PB(F)
U03AS MAIN (PE0630)		R1726	75009850	RESISTOR, CHIP (1005), CR1/16S 103JV PB(F)
U03AS MAIN (PE0630)		R1727	75009850	RESISTOR, CHIP (1005), CR1/16S 103JV PB(F)
U03AS MAIN (PE0630)		R1728	75009850	RESISTOR, CHIP (1005), CR1/16S 103JV PB(F)
U03AS MAIN (PE0630)		R1729	75009850	RESISTOR, CHIP (1005), CR1/16S 103JV PB(F)
U03AS MAIN (PE0630)		R1730	75009850	RESISTOR, CHIP (1005), CR1/16S 103JV PB(F)
U03AS MAIN (PE0630)		R1732	75009850	RESISTOR, CHIP (1005), CR1/16S 103JV PB(F)
U03AS MAIN (PE0630)		R1734	75009850	RESISTOR, CHIP (1005), CR1/16S 103JV PB(F)
U03AS MAIN (PE0630)		R1735	75009850	RESISTOR, CHIP (1005), CR1/16S 103JV PB(F)
U03AS MAIN (PE0630)		R1736	75009850	RESISTOR, CHIP (1005), CR1/16S 103JV PB(F)
U03AS MAIN (PE0630)		R1737	75009850	RESISTOR, CHIP (1005), CR1/16S 103JV PB(F)
U03AS MAIN (PE0630)		R1738	75009850	RESISTOR, CHIP (1005), CR1/16S 103JV PB(F)
U03AS MAIN (PE0630)		R1739	75009850	RESISTOR, CHIP (1005), CR1/16S 103JV PB(F)
U03AS MAIN (PE0630)		R1741	75009850	RESISTOR, CHIP (1005), CR1/16S 103JV PB(F)
U03AS MAIN (PE0630)		R1742	75009850	RESISTOR, CHIP (1005), CR1/16S 103JV PB(F)
U03AS MAIN (PE0630)		R1743	75009850	RESISTOR, CHIP (1005), CR1/16S 103JV PB(F)
U03AS MAIN (PE0630)		R1744	75009850	RESISTOR, CHIP (1005), CR1/16S 103JV PB(F)
U03AS MAIN (PE0630)		R1747	75009850	RESISTOR, CHIP (1005), CR1/16S 103JV PB(F)
U03AS MAIN (PE0630)		R1748	75009850	RESISTOR, CHIP (1005), CR1/16S 103JV PB(F)
U03AS MAIN (PE0630)		R1751	75007601	RESISTOR, CHIP(1005), CR1/16S 473JV PB(F)
U03AS MAIN (PE0630)		R2100	75007588	RESISTOR, CHIP(2012), CR1/10 750JV PB(F)
U03AS MAIN (PE0630)		R2101	75007588	RESISTOR, CHIP(2012), CR1/10 750JV PB(F)
U03AS MAIN (PE0630)		R2102	75007588	RESISTOR, CHIP(2012), CR1/10 750JV PB(F)
U03AS MAIN (PE0630)		R2103	75007588	RESISTOR, CHIP(2012), CR1/10 750JV PB(F)
U03AS MAIN (PE0630)		R2105	75007587	RESISTOR, CHIP(2012), CR1/10 151JV PB(F)
U03AS MAIN (PE0630)		R2106	75007587	RESISTOR, CHIP(2012), CR1/10 151JV PB(F)
U03AS MAIN (PE0630)		R2107	75009836	JUMPER, CHIP 1005TYPE, CR1/16S 000V PB(F)
U03AS MAIN (PE0630)		R2109	75007601	RESISTOR, CHIP(1005), CR1/16S 473JV PB(F)
U03AS MAIN (PE0630)		R2136	75009848	RESISTOR, CHIP (1005), CR1/16S 104JV PB(F)
U03AS MAIN (PE0630)		R2137	75009848	RESISTOR, CHIP (1005), CR1/16S 104JV PB(F)
U03AS MAIN (PE0630)		R2139	75007601	RESISTOR, CHIP(1005), CR1/16S 473JV PB(F)
U03AS MAIN (PE0630)		R2140	75007601	RESISTOR, CHIP(1005), CR1/16S 473JV PB(F)
U03AS MAIN (PE0630)		R2141	75007598	RESISTOR, CHIP(1005), CR1/16S 681JV PB(F)
U03AS MAIN (PE0630)		R2142	75007598	RESISTOR, CHIP(1005), CR1/16S 681JV PB(F)
U03AS MAIN (PE0630)		R2143	75007601	RESISTOR, CHIP(1005), CR1/16S 473JV PB(F)
U03AS MAIN (PE0630)		R2144	75007601	RESISTOR, CHIP(1005), CR1/16S 473JV PB(F)
U03AS MAIN (PE0630)		R2145	75007598	RESISTOR, CHIP(1005), CR1/16S 681JV PB(F)
U03AS MAIN (PE0630)		R2146	75007598	RESISTOR, CHIP(1005), CR1/16S 681JV PB(F)
U03AS MAIN (PE0630)		R2148	75009847	RESISTOR, CHIP (1005), CR1/16S 472JV PB(F)
U03AS MAIN (PE0630)		R2200	75007588	RESISTOR, CHIP(2012), CR1/10 750JV PB(F)
U03AS MAIN (PE0630)		R2201	75007588	RESISTOR, CHIP(2012), CR1/10 750JV PB(F)
U03AS MAIN (PE0630)		R2214	75009848	RESISTOR, CHIP (1005), CR1/16S 104JV PB(F)
U03AS MAIN (PE0630)		R2215	75009848	RESISTOR, CHIP (1005), CR1/16S 104JV PB(F)
U03AS MAIN (PE0630)		R2216	75007601	RESISTOR, CHIP(1005), CR1/16S 473JV PB(F)
U03AS MAIN (PE0630)		R2217	75007601	RESISTOR, CHIP(1005), CR1/16S 473JV PB(F)
U03AS MAIN (PE0630)		R2218	75007598	RESISTOR, CHIP(1005), CR1/16S 681JV PB(F)

U03AS MAIN (PE0630)		R2219	75007598	RESISTOR, CHIP(1005), CR1/16S 681JV PB(F)
U03AS MAIN (PE0630)		R2220	75007601	RESISTOR, CHIP(1005), CR1/16S 473JV PB(F)
U03AS MAIN (PE0630)		R2222	75007598	RESISTOR, CHIP(1005), CR1/16S 681JV PB(F)
U03AS MAIN (PE0630)		R2223	75007598	RESISTOR, CHIP(1005), CR1/16S 681JV PB(F)
U03AS MAIN (PE0630)		R2225	75009850	RESISTOR, CHIP (1005), CR1/16S 103JV PB(F)
U03AS MAIN (PE0630)		R2226	75009850	RESISTOR, CHIP (1005), CR1/16S 103JV PB(F)
U03AS MAIN (PE0630)		R2401	75007588	RESISTOR, CHIP(2012), CR1/10 750JV PB(F)
U03AS MAIN (PE0630)		R2402	75007588	RESISTOR, CHIP(2012), CR1/10 750JV PB(F)
U03AS MAIN (PE0630)		R2403	75007588	RESISTOR, CHIP(2012), CR1/10 750JV PB(F)
U03AS MAIN (PE0630)		R2404	75007588	RESISTOR, CHIP(2012), CR1/10 750JV PB(F)
U03AS MAIN (PE0630)		R2411	75008336	RESISTOR, CHIP(1005), CR1/16S 102JV PB(F)
U03AS MAIN (PE0630)		R2412	75008336	RESISTOR, CHIP(1005), CR1/16S 102JV PB(F)
U03AS MAIN (PE0630)		R2413	75008336	RESISTOR, CHIP(1005), CR1/16S 102JV PB(F)
U03AS MAIN (PE0630)		R2414	75008336	RESISTOR, CHIP(1005), CR1/16S 102JV PB(F)
U03AS MAIN (PE0630)		R2415	75008336	RESISTOR, CHIP(1005), CR1/16S 102JV PB(F)
U03AS MAIN (PE0630)		R2416	75008336	RESISTOR, CHIP(1005), CR1/16S 102JV PB(F)
U03AS MAIN (PE0630)		R2707	75009830	RESISTOR, CHIP (1005), CR1/16S 750JV PB(F)
U03AS MAIN (PE0630)		R2710	75009847	RESISTOR, CHIP (1005), CR1/16S 472JV PB(F)
U03AS MAIN (PE0630)		R2711	75009844	RESISTOR, CHIP (1005), CR1/16S 101JV PB(F)
U03AS MAIN (PE0630)		R2713	75009851	JUMPER, CHIP 1005TYPE, CR1/16S 000V PB(F)
U03AS MAIN (PE0630)		R2715	75009834	RESISTOR, CHIP (1005), CR1/16S 103JV PB(F)
U03AS MAIN (PE0630)		R2716	75009830	RESISTOR, CHIP (1005), CR1/16S 750JV PB(F)
U03AS MAIN (PE0630)		R2741	75009844	RESISTOR, CHIP (1005), CR1/16S 101JV PB(F)
U03AS MAIN (PE0630)		R2742	75009847	RESISTOR, CHIP (1005), CR1/16S 472JV PB(F)
U03AS MAIN (PE0630)		R2743	75009851	JUMPER, CHIP 1005TYPE, CR1/16S 000V PB(F)
U03AS MAIN (PE0630)		R2745	75009834	RESISTOR, CHIP (1005), CR1/16S 103JV PB(F)
U03AS MAIN (PE0630)		R2808	75009844	RESISTOR, CHIP (1005), CR1/16S 101JV PB(F)
U03AS MAIN (PE0630)		R2809	75007599	RESISTOR, CHIP(1005), CR1/16S 222JV PB(F)
U03AS MAIN (PE0630)		R2811	75007597	RESISTOR, CHIP(1005), CR1/16S 474JV PB(F)
U03AS MAIN (PE0630)		R2812	75009834	RESISTOR, CHIP (1005), CR1/16S 103JV PB(F)
U03AS MAIN (PE0630)		R2843	75009847	RESISTOR, CHIP (1005), CR1/16S 472JV PB(F)
U03AS MAIN (PE0630)		R2844	75009834	RESISTOR, CHIP (1005), CR1/16S 103JV PB(F)
U03AS MAIN (PE0630)		R2845	75005998	RESISTOR, CHIP (1005), CR1/16S 333JV PB(F)
U03AS MAIN (PE0630)		R2846	75007600	RESISTOR, CHIP(1005), CR1/16S 223JV PB(F)
U03AS MAIN (PE0630)		R2847	75007601	RESISTOR, CHIP(1005), CR1/16S 473JV PB(F)
U03AS MAIN (PE0630)		R2848	75007601	RESISTOR, CHIP(1005), CR1/16S 473JV PB(F)
U03AS MAIN (PE0630)		R2849	75007601	RESISTOR, CHIP(1005), CR1/16S 473JV PB(F)
U03AS MAIN (PE0630)		R2850	75009830	RESISTOR, CHIP (1005), CR1/16S 750JV PB(F)
U03AS MAIN (PE0630)		R2900	75009834	RESISTOR, CHIP (1005), CR1/16S 103JV PB(F)
U03AS MAIN (PE0630)		R2901	75005986	RESISTOR, CHIP (1005), CR1/16S 183JV PB(F)
U03AS MAIN (PE0630)		R2902	75009834	RESISTOR, CHIP (1005), CR1/16S 103JV PB(F)
U03AS MAIN (PE0630)		R2903	75005986	RESISTOR, CHIP (1005), CR1/16S 183JV PB(F)
U03AS MAIN (PE0630)		R2904	75009834	RESISTOR, CHIP (1005), CR1/16S 103JV PB(F)
U03AS MAIN (PE0630)		R2905	75005986	RESISTOR, CHIP (1005), CR1/16S 183JV PB(F)
U03AS MAIN (PE0630)		R2906	75005986	RESISTOR, CHIP (1005), CR1/16S 183JV PB(F)
U03AS MAIN (PE0630)		R2907	75009834	RESISTOR, CHIP (1005), CR1/16S 103JV PB(F)
U03AS MAIN (PE0630)		R3000	75010138	RESISTOR, CHIP (1608), CR1/16 472JV PB(F)

U03AS MAIN (PE0630)		R3002	75010138	RESISTOR, CHIP (1608), CR1/16 472JV PB(F)
U03AS MAIN (PE0630)		R3006	75008336	RESISTOR, CHIP(1005), CR1/16S 102JV PB(F)
U03AS MAIN (PE0630)		R3008	75008330	RESISTOR, CHIP(1005), CR1/16S 472FV PB(F)
U03AS MAIN (PE0630)		R3009	75008336	RESISTOR, CHIP(1005), CR1/16S 102JV PB(F)
U03AS MAIN (PE0630)		R3010	75010142	RESISTOR, CHIP (1608), CR1/16 472JV PB(F)
U03AS MAIN (PE0630)		R3011	75007601	RESISTOR, CHIP(1005), CR1/16S 473JV PB(F)
U03AS MAIN (PE0630)		R3013	75010142	RESISTOR, CHIP (1608), CR1/16 472JV PB(F)
U03AS MAIN (PE0630)		R3014	75007601	RESISTOR, CHIP(1005), CR1/16S 473JV PB(F)
U03AS MAIN (PE0630)		R3015	75008336	RESISTOR, CHIP(1005), CR1/16S 102JV PB(F)
U03AS MAIN (PE0630)		R3017	75008336	RESISTOR, CHIP(1005), CR1/16S 102JV PB(F)
U03AS MAIN (PE0630)		R3019	75008336	RESISTOR, CHIP(1005), CR1/16S 102JV PB(F)
U03AS MAIN (PE0630)		R3022	75007601	RESISTOR, CHIP(1005), CR1/16S 473JV PB(F)
U03AS MAIN (PE0630)		R3028	75007601	RESISTOR, CHIP(1005), CR1/16S 473JV PB(F)
U03AS MAIN (PE0630)		R3500	75008336	RESISTOR, CHIP(1005), CR1/16S 102JV PB(F)
U03AS MAIN (PE0630)		R3501	75009847	RESISTOR, CHIP (1005), CR1/16S 472JV PB(F)
U03AS MAIN (PE0630)		R3502	75009850	RESISTOR, CHIP (1005), CR1/16S 103JV PB(F)
U03AS MAIN (PE0630)		R3504	75008336	RESISTOR, CHIP(1005), CR1/16S 102JV PB(F)
U03AS MAIN (PE0630)		R3505	75009847	RESISTOR, CHIP (1005), CR1/16S 472JV PB(F)
U03AS MAIN (PE0630)		R3506	75009850	RESISTOR, CHIP (1005), CR1/16S 103JV PB(F)
U03AS MAIN (PE0630)		R3511	75007601	RESISTOR, CHIP(1005), CR1/16S 473JV PB(F)
U03AS MAIN (PE0630)		R3512	75005805	RESISTOR, CHIP, 1005 CR1/16S 224JV PB(F)
U03AS MAIN (PE0630)		R6000	75005804	RESISTOR, CHIP, 1005 CR1/16S 153JV PB(F)
U03AS MAIN (PE0630)		R6001	75005804	RESISTOR, CHIP, 1005 CR1/16S 153JV PB(F)
U03AS MAIN (PE0630)		R6002	75005985	RESISTOR, CHIP (1005), CR1/16S 332JV PB(F)
U03AS MAIN (PE0630)		R6003	75007600	RESISTOR, CHIP(1005), CR1/16S 223JV PB(F)
U03AS MAIN (PE0630)		R6004	75007600	RESISTOR, CHIP(1005), CR1/16S 223JV PB(F)
U03AS MAIN (PE0630)		R6005	75007601	RESISTOR, CHIP(1005), CR1/16S 473JV PB(F)
U03AS MAIN (PE0630)		R6006	75007601	RESISTOR, CHIP(1005), CR1/16S 473JV PB(F)
U03AS MAIN (PE0630)		R6028	75009844	RESISTOR, CHIP (1005), CR1/16S 101JV PB(F)
U03AS MAIN (PE0630)		R6029	75009844	RESISTOR, CHIP (1005), CR1/16S 101JV PB(F)
U03AS MAIN (PE0630)		R6030	75007601	RESISTOR, CHIP(1005), CR1/16S 473JV PB(F)
U03AS MAIN (PE0630)		R6031	75007601	RESISTOR, CHIP(1005), CR1/16S 473JV PB(F)
U03AS MAIN (PE0630)		R6032	75007601	RESISTOR, CHIP(1005), CR1/16S 473JV PB(F)
U03AS MAIN (PE0630)		R6033	75007600	RESISTOR, CHIP(1005), CR1/16S 223JV PB(F)
U03AS MAIN (PE0630)		R6060	75005985	RESISTOR, CHIP (1005), CR1/16S 332JV PB(F)
U03AS MAIN (PE0630)		R6062	75005804	RESISTOR, CHIP, 1005 CR1/16S 153JV PB(F)
U03AS MAIN (PE0630)		R6063	75005804	RESISTOR, CHIP, 1005 CR1/16S 153JV PB(F)
U03AS MAIN (PE0630)		R6065	75007601	RESISTOR, CHIP(1005), CR1/16S 473JV PB(F)
U03AS MAIN (PE0630)		R6067	75007601	RESISTOR, CHIP(1005), CR1/16S 473JV PB(F)
U03AS MAIN (PE0630)		R6078	75007600	RESISTOR, CHIP(1005), CR1/16S 223JV PB(F)
U03AS MAIN (PE0630)		R6079	75007600	RESISTOR, CHIP(1005), CR1/16S 223JV PB(F)
U03AS MAIN (PE0630)		R6101	75012544	RESISTOR, CHIP(3216), CR1/8 221FV PB(F)
U03AS MAIN (PE0630)		R6102	75009448	RESISTOR, CHIP (3216), CR1/8 6R8FV PB(F)
U03AS MAIN (PE0630)		R6103	75009448	RESISTOR, CHIP (3216), CR1/8 6R8FV PB(F)
U03AS MAIN (PE0630)		R6104	75012544	RESISTOR, CHIP(3216), CR1/8 221FV PB(F)
U03AS MAIN (PE0630)		R6105	75009448	RESISTOR, CHIP (3216), CR1/8 6R8FV PB(F)
U03AS MAIN (PE0630)		R6106	75009448	RESISTOR, CHIP (3216), CR1/8 6R8FV PB(F)

U03AS MAIN (PE0630)		R6107	75007600	RESISTOR, CHIP(1005), CR1/16S 223JV PB(F)
U03AS MAIN (PE0630)		R6108	75007599	RESISTOR, CHIP(1005), CR1/16S 222JV PB(F)
U03AS MAIN (PE0630)		R6109	75009844	RESISTOR, CHIP (1005), CR1/16S 101JV PB(F)
U03AS MAIN (PE0630)		R6110	75009844	RESISTOR, CHIP (1005), CR1/16S 101JV PB(F)
U03AS MAIN (PE0630)		R6111	75007600	RESISTOR, CHIP(1005), CR1/16S 223JV PB(F)
U03AS MAIN (PE0630)		R6112	75009834	RESISTOR, CHIP (1005), CR1/16S 103JV PB(F)
U03AS MAIN (PE0630)		R6113	75009844	RESISTOR, CHIP (1005), CR1/16S 101JV PB(F)
U03AS MAIN (PE0630)		R6114	75009844	RESISTOR, CHIP (1005), CR1/16S 101JV PB(F)
U03AS MAIN (PE0630)		R6115	75009844	RESISTOR, CHIP (1005), CR1/16S 101JV PB(F)
U03AS MAIN (PE0630)		R6116	75009844	RESISTOR, CHIP (1005), CR1/16S 101JV PB(F)
U03AS MAIN (PE0630)		R6117	75010703	RESISTOR, CHIP (1005), CR1/16S 622FV PB(F)
U03AS MAIN (PE0630)		R6118	75009851	JUMPER, CHIP 1005TYPE, CR1/16S 000V PB(F)
U03AS MAIN (PE0630)		R6119	75009851	JUMPER, CHIP 1005TYPE, CR1/16S 000V PB(F)
U03AS MAIN (PE0630)		R6151	75010698	RESISTOR, CHIP (3216), ERJ8ENF75R0V
U03AS MAIN (PE0630)		R6152	75010698	RESISTOR, CHIP (3216), ERJ8ENF75R0V
U03AS MAIN (PE0630)		R6154	75010698	RESISTOR, CHIP (3216), ERJ8ENF75R0V
U03AS MAIN (PE0630)		R6155	75010698	RESISTOR, CHIP (3216), ERJ8ENF75R0V
U03AS MAIN (PE0630)		R6301	75009836	JUMPER, CHIP 1005TYPE, CR1/16S 000V PB(F)
U03AS MAIN (PE0630)		R6302	75007599	RESISTOR, CHIP(1005), CR1/16S 222JV PB(F)
U03AS MAIN (PE0630)		R6304	75007600	RESISTOR, CHIP(1005), CR1/16S 223JV PB(F)
U03AS MAIN (PE0630)		R6305	75009840	RESISTOR, CHIP (1005), CR1/16S 102JV PB(F)
U03AS MAIN (PE0630)		R6306	75009848	RESISTOR, CHIP (1005), CR1/16S 104JV PB(F)
U03AS MAIN (PE0630)		R6307	75009848	RESISTOR, CHIP (1005), CR1/16S 104JV PB(F)
U03AS MAIN (PE0630)		R6308	75007600	RESISTOR, CHIP(1005), CR1/16S 223JV PB(F)
U03AS MAIN (PE0630)		R6309	75009834	RESISTOR, CHIP (1005), CR1/16S 103JV PB(F)
U03AS MAIN (PE0630)		R6310	75007601	RESISTOR, CHIP(1005), CR1/16S 473JV PB(F)
U03AS MAIN (PE0630)		R6311	75009834	RESISTOR, CHIP (1005), CR1/16S 103JV PB(F)
U03AS MAIN (PE0630)		R6312	75007600	RESISTOR, CHIP(1005), CR1/16S 223JV PB(F)
U03AS MAIN (PE0630)		R6313	75009848	RESISTOR, CHIP (1005), CR1/16S 104JV PB(F)
U03AS MAIN (PE0630)		R6314	75009840	RESISTOR, CHIP (1005), CR1/16S 102JV PB(F)
U03AS MAIN (PE0630)		R6315	75009834	RESISTOR, CHIP (1005), CR1/16S 103JV PB(F)
U03AS MAIN (PE0630)		R6316	75009840	RESISTOR, CHIP (1005), CR1/16S 102JV PB(F)
U03AS MAIN (PE0630)		R6317	75009834	RESISTOR, CHIP (1005), CR1/16S 103JV PB(F)
U03AS MAIN (PE0630)		R6401	75009847	RESISTOR, CHIP (1005), CR1/16S 472JV PB(F)
U03AS MAIN (PE0630)		R6402	75009847	RESISTOR, CHIP (1005), CR1/16S 472JV PB(F)
U03AS MAIN (PE0630)		R6403	75006537	RESISTOR, CHIP (1005), CR1/16S 203JV PB(F)
U03AS MAIN (PE0630)		R6404	75006537	RESISTOR, CHIP (1005), CR1/16S 203JV PB(F)
U03AS MAIN (PE0630)		R6405	75009834	RESISTOR, CHIP (1005), CR1/16S 103JV PB(F)
U03AS MAIN (PE0630)		R6406	75009834	RESISTOR, CHIP (1005), CR1/16S 103JV PB(F)
U03AS MAIN (PE0630)		R6407	75009834	RESISTOR, CHIP (1005), CR1/16S 103JV PB(F)
U03AS MAIN (PE0630)		R6408	75007601	RESISTOR, CHIP(1005), CR1/16S 473JV PB(F)
U03AS MAIN (PE0630)		R6409	75009848	RESISTOR, CHIP (1005), CR1/16S 104JV PB(F)
U03AS MAIN (PE0630)		R7001	75009849	RESISTOR, CHIP (1005), CR1/16S 101JV PB(F)
U03AS MAIN (PE0630)		R7002	75009849	RESISTOR, CHIP (1005), CR1/16S 101JV PB(F)
U03AS MAIN (PE0630)		R7003	75009848	RESISTOR, CHIP (1005), CR1/16S 104JV PB(F)
U03AS MAIN (PE0630)		R7004	75009848	RESISTOR, CHIP (1005), CR1/16S 104JV PB(F)
U03AS MAIN (PE0630)		R7006	75009848	RESISTOR, CHIP (1005), CR1/16S 104JV PB(F)

U03AS MAIN (PE0630)		R7007	75009850	RESISTOR, CHIP (1005), CR1/16S 103JV PB(F)
U03AS MAIN (PE0630)		R7008	75009850	RESISTOR, CHIP (1005), CR1/16S 103JV PB(F)
U03AS MAIN (PE0630)		R7011	75008670	RESISTOR, CHIP (1005), CR1/16S 163FV PB(F)
U03AS MAIN (PE0630)		R7012	75005987	RESISTOR, CHIP (1005), CR1/16S 201JV PB(F)
U03AS MAIN (PE0630)		R7013	75009842	RESISTOR, CHIP (1005), CR1/16S 330JV PB(F)
U03AS MAIN (PE0630)		R7014	75009842	RESISTOR, CHIP (1005), CR1/16S 330JV PB(F)
U03AS MAIN (PE0630)		R7015	75009842	RESISTOR, CHIP (1005), CR1/16S 330JV PB(F)
U03AS MAIN (PE0630)		R7016	75009842	RESISTOR, CHIP (1005), CR1/16S 330JV PB(F)
U03AS MAIN (PE0630)		R7017	75009842	RESISTOR, CHIP (1005), CR1/16S 330JV PB(F)
U03AS MAIN (PE0630)		R8000	75009851	JUMPER, CHIP 1005TYPE, CR1/16S 000V PB(F)
U03AS MAIN (PE0630)		R8001	75009851	JUMPER, CHIP 1005TYPE, CR1/16S 000V PB(F)
U03AS MAIN (PE0630)		R8002	75009851	JUMPER, CHIP 1005TYPE, CR1/16S 000V PB(F)
U03AS MAIN (PE0630)		R8003	75009851	JUMPER, CHIP 1005TYPE, CR1/16S 000V PB(F)
U03AS MAIN (PE0630)		R8004	75009916	RESISTOR, CHIP (1005), CR1/16S 183DV PB(F)
U03AS MAIN (PE0630)		R8005	75008335	RESISTOR, CHIP(1005), CR1/16S 103DV PB(F)
U03AS MAIN (PE0630)		R8006	75009847	RESISTOR, CHIP (1005), CR1/16S 472JV PB(F)
U03AS MAIN (PE0630)		R8007	75009847	RESISTOR, CHIP (1005), CR1/16S 472JV PB(F)
U03AS MAIN (PE0630)		R8009	75010143	CHIP JUMPER, 1608TYPE, CR1/16 000V PB(F)
U03AS MAIN (PE0630)		R8010	75007986	RESISTOR, CHIP(1005), CR1/16S 681DV PB(F)
U03AS MAIN (PE0630)		R8011	75010143	CHIP JUMPER, 1608TYPE, CR1/16 000V PB(F)
U03AS MAIN (PE0630)		R8013	75010143	CHIP JUMPER, 1608TYPE, CR1/16 000V PB(F)
U03AS MAIN (PE0630)		R8014	75007985	RESISTOR, CHIP(1005), CR1/16S 151DV PB(F)
U03AS MAIN (PE0630)		R8015	75009851	JUMPER, CHIP 1005TYPE, CR1/16S 000V PB(F)
U03AS MAIN (PE0630)		R8016	75009851	JUMPER, CHIP 1005TYPE, CR1/16S 000V PB(F)
U03AS MAIN (PE0630)		R8017	75009842	RESISTOR, CHIP (1005), CR1/16S 330JV PB(F)
U03AS MAIN (PE0630)		R8018	75009834	RESISTOR, CHIP (1005), CR1/16S 103JV PB(F)
U03AS MAIN (PE0630)		R8019	75009850	RESISTOR, CHIP (1005), CR1/16S 103JV PB(F)
U03AS MAIN (PE0630)		R8020	75009842	RESISTOR, CHIP (1005), CR1/16S 330JV PB(F)
U03AS MAIN (PE0630)		R8022	75008336	RESISTOR, CHIP(1005), CR1/16S 102JV PB(F)
U03AS MAIN (PE0630)		R8023	75009842	RESISTOR, CHIP (1005), CR1/16S 330JV PB(F)
U03AS MAIN (PE0630)		R8503	75009844	RESISTOR, CHIP (1005), CR1/16S 101JV PB(F)
U03AS MAIN (PE0630)		R8504	75009844	RESISTOR, CHIP (1005), CR1/16S 101JV PB(F)
U03AS MAIN (PE0630)		R8506	75009844	RESISTOR, CHIP (1005), CR1/16S 101JV PB(F)
U03AS MAIN (PE0630)		R8507	75009834	RESISTOR, CHIP (1005), CR1/16S 103JV PB(F)
U03AS MAIN (PE0630)		R8508	75007590	RESISTOR, CHIP(1005), CR1/16S 273JV PB(F)
U03AS MAIN (PE0630)		R8509	75009836	JUMPER, CHIP 1005TYPE, CR1/16S 000V PB(F)
U03AS MAIN (PE0630)		R8510	75010701	RESISTOR, CHIP (1005), CR1/16S 302JV PB(F)
U03AS MAIN (PE0630)		R8511	75009846	RESISTOR, CHIP (1005), CR1/16S 152JV PB(F)
U03AS MAIN (PE0630)		R8512	75010706	RESISTOR, CHIP (1005), ERJ2GEJ510X
U03AS MAIN (PE0630)		R8514	75009836	JUMPER, CHIP 1005TYPE, CR1/16S 000V PB(F)
U03AS MAIN (PE0630)		R8515	75010701	RESISTOR, CHIP (1005), CR1/16S 302JV PB(F)
U03AS MAIN (PE0630)		R8516	75009846	RESISTOR, CHIP (1005), CR1/16S 152JV PB(F)
U03AS MAIN (PE0630)		R8517	75010706	RESISTOR, CHIP (1005), ERJ2GEJ510X
U03AS MAIN (PE0630)		R8525	75009836	JUMPER, CHIP 1005TYPE, CR1/16S 000V PB(F)
U03AS MAIN (PE0630)		R9017	75009851	JUMPER, CHIP 1005TYPE, CR1/16S 000V PB(F)
U03AS MAIN (PE0630)		R9208	75009834	RESISTOR, CHIP (1005), CR1/16S 103JV PB(F)
U03AS MAIN (PE0630)		R9209	75009847	RESISTOR, CHIP (1005), CR1/16S 472JV PB(F)

U03AS MAIN (PE0630)		R9211	75009840	RESISTOR, CHIP (1005), CR1/16S 102JV PB(F)
U03AS MAIN (PE0630)		R9212	75009842	RESISTOR, CHIP (1005), CR1/16S 330JV PB(F)
U03AS MAIN (PE0630)		R9214	75009844	RESISTOR, CHIP (1005), CR1/16S 101JV PB(F)
U03AS MAIN (PE0630)		R9500	75005985	RESISTOR, CHIP (1005), CR1/16S 332JV PB(F)
U03AS MAIN (PE0630)		R9501	75005985	RESISTOR, CHIP (1005), CR1/16S 332JV PB(F)
U03AS MAIN (PE0630)		R9502	75009850	RESISTOR, CHIP (1005), CR1/16S 103JV PB(F)
U03AS MAIN (PE0630)		R9503	75009844	RESISTOR, CHIP (1005), CR1/16S 101JV PB(F)
U03AS MAIN (PE0630)		R9504	75012551	RESISTOR, CHIP(1608), ERJ3GEYJ243V
U03AS MAIN (PE0630)		R9505	75009851	JUMPER, CHIP 1005TYPE, CR1/16S 000V PB(F)
U03AS MAIN (PE0630)		R9506	75012546	RESISTOR, CHIP(1608), CR1/16 362FV PB(F)
U03AS MAIN (PE0630)		R9507	75012545	RESISTOR, CHIP(1608), ERJ3GEYF243V
U03AS MAIN (PE0630)		R9508	75009832	RESISTOR, CHIP (1005), CR1/16S 103FV PB(F)
U03AS MAIN (PE0630)		R9511	75009832	RESISTOR, CHIP (1005), CR1/16S 103FV PB(F)
U03AS MAIN (PE0630)		R9512	75012547	RESISTOR, CHIP(1005), CR1/16S 750FV PB(F)
U03AS MAIN (PE0630)		R9513	75008013	RESISTOR, CHIP(1005), CR1/16S 101FV PB(F)
U03AS MAIN (PE0630)		R9514	75011116	RESISTOR, CHIP (1005), CR1/16S 392FV PB(F)
U03AS MAIN (PE0630)		R9515	75011076	RESISTOR, CHIP (1005), CR1/16S 682DV PB(F)
U03AS MAIN (PE0630)		R9516	75009844	RESISTOR, CHIP (1005), CR1/16S 101JV PB(F)
U03AS MAIN (PE0630)		R9517	75009850	RESISTOR, CHIP (1005), CR1/16S 103JV PB(F)
U03AS MAIN (PE0630)		R9518	75008533	RESISTOR, CHIP(1005), CR1/16S 102DV PB(F)
U03AS MAIN (PE0630)		R9519	75008533	RESISTOR, CHIP(1005), CR1/16S 102DV PB(F)
U03AS MAIN (PE0630)		R9520	75008533	RESISTOR, CHIP(1005), CR1/16S 102DV PB(F)
U03AS MAIN (PE0630)		R9521	75008533	RESISTOR, CHIP(1005), CR1/16S 102DV PB(F)
U03AS MAIN (PE0630)		R9524	75009850	RESISTOR, CHIP (1005), CR1/16S 103JV PB(F)
U03AS MAIN (PE0630)		R9525	75009851	JUMPER, CHIP 1005TYPE, CR1/16S 000V PB(F)
U03AS MAIN (PE0630)		R9601	75008335	RESISTOR, CHIP(1005), CR1/16S 103DV PB(F)
U03AS MAIN (PE0630)		R9602	75011074	RESISTOR, CHIP (1005), CR1/16S 473DV PB(F)
U03AS MAIN (PE0630)		R9603	75005996	RESISTOR, CHIP (1005), CR1/16S 682DV PB(F)
U03AS MAIN (PE0630)		R9605	75011075	RESISTOR, CHIP (1005), CR1/16S 104DV PB(F)
U03AS MAIN (PE0630)		R9606	75011075	RESISTOR, CHIP (1005), CR1/16S 104DV PB(F)
U03AS MAIN (PE0630)		R9607	75012278	RESISTOR, CHIP (1005), CR1/16S 512DV PB(F)
U03AS MAIN (PE0630)		R9608	75011075	RESISTOR, CHIP (1005), CR1/16S 104DV PB(F)
U03AS MAIN (PE0630)		R9611	75010857	RESISTOR, CHIP (1005), CR1/16S 124DV PB(F)
U03AS MAIN (PE0630)		R9612	75008335	RESISTOR, CHIP(1005), CR1/16S 103DV PB(F)
U03AS MAIN (PE0630)		R9613	75008335	RESISTOR, CHIP(1005), CR1/16S 103DV PB(F)
U03AS MAIN (PE0630)		R9614	75010852	RESISTOR, CHIP (1005), CR1/16S 333DV PB(F)
U03AS MAIN (PE0630)		R9615	75010862	RESISTOR, CHIP (1005), CR1/16S 274DV PB(F)
U03AS MAIN (PE0630)		R9637	75010850	RESISTOR, CHIP (1005), CR1/16S 223DV PB(F)
U03AS MAIN (PE0630)		R9638	75011074	RESISTOR, CHIP (1005), CR1/16S 473DV PB(F)
U03AS MAIN (PE0630)		R9639	75007989	RESISTOR, CHIP(1005), ERJ2RKD224X
U03AS MAIN (PE0630)		R9640	75010705	RESISTOR, CHIP (1005), CR1/16S 332DV PB(F)
U03AS MAIN (PE0630)		R9641	75008335	RESISTOR, CHIP(1005), CR1/16S 103DV PB(F)
U03AS MAIN (PE0630)		RM160	75009917	RESISTOR, NETWORK, CHIP (1005X4), CRA108560JV P
U03AS MAIN (PE0630)		RM161	75009917	RESISTOR, NETWORK, CHIP (1005X4), CRA108560JV P
U03AS MAIN (PE0630)		RM162	75009917	RESISTOR, NETWORK, CHIP (1005X4), CRA108560JV P
U03AS MAIN (PE0630)		RM163	75009917	RESISTOR, NETWORK, CHIP (1005X4), CRA108560JV P
U03AS MAIN (PE0630)		RM164	75009917	RESISTOR, NETWORK, CHIP (1005X4), CRA108560JV P

U03AS MAIN (PE0630)		RM165	75009917	RESISTOR, NETWORK, CHIP (1005X4), CRA108560JV P
U03AS MAIN (PE0630)		RM166	75009917	RESISTOR, NETWORK, CHIP (1005X4), CRA108560JV P
U03AS MAIN (PE0630)		RM701	75009839	RESISTOR, NETWORK CHIP (1005X4), CRA108330JV PB
U03AS MAIN (PE0630)		RM702	75009839	RESISTOR, NETWORK CHIP (1005X4), CRA108330JV PB
U03AS MAIN (PE0630)		RM703	75009839	RESISTOR, NETWORK CHIP (1005X4), CRA108330JV PB
U03AS MAIN (PE0630)		RM704	75009839	RESISTOR, NETWORK CHIP (1005X4), CRA108330JV PB
U03AS MAIN (PE0630)		RM705	75009839	RESISTOR, NETWORK CHIP (1005X4), CRA108330JV PB
U03AS MAIN (PE0630)		RM706	75009839	RESISTOR, NETWORK CHIP (1005X4), CRA108330JV PB
U03AS MAIN (PE0630)		RM707	75009828	RESISTOR, CHIP NETWORK (1005X4), CRA108220JV PB
U03AS MAIN (PE0630)		RM708	75009828	RESISTOR, CHIP NETWORK (1005X4), CRA108220JV PB
U03AS MAIN (PE0630)		RM709	75009828	RESISTOR, CHIP NETWORK (1005X4), CRA108220JV PB
U03AS MAIN (PE0630)		RM710	75009828	RESISTOR, CHIP NETWORK (1005X4), CRA108220JV PB
U03AS MAIN (PE0630)		RM711	75009828	RESISTOR, CHIP NETWORK (1005X4), CRA108220JV PB
U03AS MAIN (PE0630)		RM712	75009828	RESISTOR, CHIP NETWORK (1005X4), CRA108220JV PB
U03AS MAIN (PE0630)		RM713	75009921	RESISTOR, NETWORK, CHIP (1005X4), CRA108330JV P
U03AS MAIN (PE0630)		RM714	75009921	RESISTOR, NETWORK, CHIP (1005X4), CRA108330JV P
U03AS MAIN (PE0630)		RM715	75009917	RESISTOR, NETWORK, CHIP (1005X4), CRA108560JV P
U03AS MAIN (PE0630)		RM716	75009917	RESISTOR, NETWORK, CHIP (1005X4), CRA108560JV P
U03AS MAIN (PE0630)		RM717	75009917	RESISTOR, NETWORK, CHIP (1005X4), CRA108560JV P
U03AS MAIN (PE0630)		RM718	75009917	RESISTOR, NETWORK, CHIP (1005X4), CRA108560JV P
U03AS MAIN (PE0630)		RM800	75009921	RESISTOR, NETWORK, CHIP (1005X4), CRA108330JV P
U03AS MAIN (PE0630)		RM801	75009921	RESISTOR, NETWORK, CHIP (1005X4), CRA108330JV P
U03AS MAIN (PE0630)		RV200	75008678	VARISTOR, EZJZ0V270RA
U03AS MAIN (PE0630)		RV201	75008678	VARISTOR, EZJZ0V270RA
U03AS MAIN (PE0630)		RV202	75008678	VARISTOR, EZJZ0V270RA
U03AS MAIN (PE0630)		RV203	75008678	VARISTOR, EZJZ0V270RA
U03AS MAIN (PE0630)		RV204	75008678	VARISTOR, EZJZ0V270RA
U03AS MAIN (PE0630)		RV206	75008678	VARISTOR, EZJZ0V270RA
U03AS MAIN (PE0630)		RV207	75008678	VARISTOR, EZJZ0V270RA
U03AS MAIN (PE0630)		RV209	75008678	VARISTOR, EZJZ0V270RA
U03AS MAIN (PE0630)		RV210	75008678	VARISTOR, EZJZ0V270RA
U03AS MAIN (PE0630)		RV213	75008678	VARISTOR, EZJZ0V270RA
U03AS MAIN (PE0630)		RV214	75008678	VARISTOR, EZJZ0V270RA
U03AS MAIN (PE0630)		RV215	75008678	VARISTOR, EZJZ0V270RA
U03AS MAIN (PE0630)		RV500	75008678	VARISTOR, EZJZ0V270RA
U03AS MAIN (PE0630)		RV501	75008678	VARISTOR, EZJZ0V270RA
U03AS MAIN (PE0630)		RV502	75008678	VARISTOR, EZJZ0V270RA
U03AS MAIN (PE0630)		RV503	75008678	VARISTOR, EZJZ0V270RA
U03AS MAIN (PE0630)		W1001	75009836	JUMPER, CHIP 1005TYPE, CR1/16S 000V PB(F)
U03AS MAIN (PE0630)		W1100	75009836	JUMPER, CHIP 1005TYPE, CR1/16S 000V PB(F)
U03AS MAIN (PE0630)		W1101	75009836	JUMPER, CHIP 1005TYPE, CR1/16S 000V PB(F)
U03AS MAIN (PE0630)		W1201	75009837	JUMPER, CHIP 1608TYPE, CR1/16 000V PB(F)
U03AS MAIN (PE0630)		W1301	75009837	JUMPER, CHIP 1608TYPE, CR1/16 000V PB(F)
U03AS MAIN (PE0630)		W1302	75009837	JUMPER, CHIP 1608TYPE, CR1/16 000V PB(F)
U03AS MAIN (PE0630)		W1303	75009837	JUMPER, CHIP 1608TYPE, CR1/16 000V PB(F)
U03AS MAIN (PE0630)		W1304	75009837	JUMPER, CHIP 1608TYPE, CR1/16 000V PB(F)
U03AS MAIN (PE0630)		W7081	75009842	RESISTOR, CHIP (1005), CR1/16S 330JV PB(F)

U03AS MAIN (PE0630)		W8000	75009851	JUMPER, CHIP 1005TYPE, CR1/16S 000V PB(F)
U03AS MAIN (PE0630)		W8001	75009851	JUMPER, CHIP 1005TYPE, CR1/16S 000V PB(F)
U03AS MAIN (PE0630)		W8004	75009923	RESISTOR, CHIP (2012), CR1/10 000V PB(F)
U03AS MAIN (PE0630)		W8005	75009923	RESISTOR, CHIP (2012), CR1/10 000V PB(F)
U03AS MAIN (PE0630)		W8006	75012552	JUMPER, CHIP 3216TYPE, CR1/8 000V PB(F)
U03AS MAIN (PE0630)		W8007	75012552	JUMPER, CHIP 3216TYPE, CR1/8 000V PB(F)
U03AS MAIN (PE0630)		W8008	75012552	JUMPER, CHIP 3216TYPE, CR1/8 000V PB(F)
U03AS MAIN (PE0630)		W8009	75012552	JUMPER, CHIP 3216TYPE, CR1/8 000V PB(F)
U03AS MAIN (PE0630)		W9003	75009837	JUMPER, CHIP 1608TYPE, CR1/16 000V PB(F)
U03AS MAIN (PE0630)		W9004	75009837	JUMPER, CHIP 1608TYPE, CR1/16 000V PB(F)
U03AS MAIN (PE0630)		W9006	75009837	JUMPER, CHIP 1608TYPE, CR1/16 000V PB(F)
U03AS MAIN (PE0630)		W9007	75009837	JUMPER, CHIP 1608TYPE, CR1/16 000V PB(F)
U03AS MAIN (PE0630)		W9025	75009837	JUMPER, CHIP 1608TYPE, CR1/16 000V PB(F)
U03AS MAIN (PE0630)		W9027	75009837	JUMPER, CHIP 1608TYPE, CR1/16 000V PB(F)
U03AS MAIN (PE0630)		W9502	75010114	RESISTOR, CHIP (1608), CR1/16 102JV PB(F)
U03AS MAIN (PE0630)		W9503	75009837	JUMPER, CHIP 1608TYPE, CR1/16 000V PB(F)
U03AS MAIN (PE0630)		W9603	75009851	JUMPER, CHIP 1005TYPE, CR1/16S 000V PB(F)
U03AS MAIN (PE0630)		W9611	75009851	JUMPER, CHIP 1005TYPE, CR1/16S 000V PB(F)
U03AS MAIN (PE0630)		X1301	75012563	CRYSTAL, CHIP, SMD-49 12MHZ 12PF
U03AS MAIN (PE0630)		X8001	75011438	RESONATOR, 20PPM 70OHM CL=8PF, NX5032GC-EXS0C

PARTS LIST

Block : Miscellaneous

Block		Location	Parts No.	Description
Miscellaneous	⚠	B001A	75011173	LCD PANEL, LC420WXN-SAB1
Miscellaneous		H001	75010735	TUNER, ENG37E05KF
Miscellaneous		MZ01A	75010968	WIRE HARNESS, MF0154
Miscellaneous	⚠	P801	23372353	POWER CORD, UK 250V3A FL/FUSE13
Miscellaneous	⚠	P801	23372368	POWER CORD, CEE FL M5206 250V2 206 - 2.3M HOUSING
Miscellaneous		PP08	23974994	BAND, KESSOKU
Miscellaneous	⚠	U800	75012584	POWER UNIT, SRV2170WW
Miscellaneous		W661	75011535	SPEAKER, SPK1503AO, 35X120 8-OHM 10W
Miscellaneous		Z006	23103840	FERRITE CORE, TFE1013
Miscellaneous		Z007	23103914	FERRITE CORE, TFE1015AD
Miscellaneous		Z008	23103841	FERRITE CORE, TFE1014
Miscellaneous		Z009	23103778	FERRITE CORE, TFE1008

PARTS LIST

Block : Accessory

Block		Location	Parts No.	Description
Accessory	⚠	Y101	75012576	OWNERS MANUAL
Accessory	⚠	Y101E	75012578	OWNERS MANUAL, EURO
Accessory	⚠	Y102E	75012579	OWNERS MANUAL, NORDIC
Accessory		Y105	75010347	OWNERS MANUAL, STD EU
Accessory		Y110	75012577	OWNERS MANUAL, QSUG
Accessory		Y114	75012580	OWNERS MANUAL, ITA, SCHEMA
Accessory		Y115	75009771	OWNERS MANUAL, XF DIGITAL UK RETUNE GUIDE
Accessory		Y130	75010737	REMOCON HAND UNIT, CT-90300
Accessory		Y131	75012514	POWER UNIT BATTERY, R03UG(JE)SP-2TGC-T
Accessory		Y170	23845800	HOLDER, WIRE, NYLON66 D6.8
Accessory		Y186	75009788	CLOTH, CLEAN

PARTS LIST

Block : Cabinet

Location : Search

Parts No. : Search

Page : 1 / 1 Jump

Block		Location	Parts No.	Description AA S M L
Cabinet		A201	75010959	FRNT BEZEL ASSY
Cabinet	⚠	A401	75010960	BACK COVER ASSY
Cabinet		A412	75010345	SCREW, BITTB3X8 SBN
Cabinet		A420	75010961	BRACKET ASSY, STAND
Cabinet		A421	75011371	BASE COVER, STAND
Cabinet		A430	75005733	PIECE CLAMP HOLDER

PARTS LIST

Block : Packing

Location : Search

Parts No. : Search

Page : 1 / 1 Jump

Block		Location	Parts No.	Description AA S M L
Packing		A701A	75010966	CARTON BOX, TOP
Packing		A701B	75010965	CARTON BOX, BOTTOM
Packing		A702A	75010964	PAD, TOP PACKING
Packing		A702B	75010963	PAD, BOTTOM PACKING
Packing		A705	23518043	PACKING, JOINT

FUNCTION AND OPERATION

The Remote Control

Simple at-a-glance reference of your remote control.

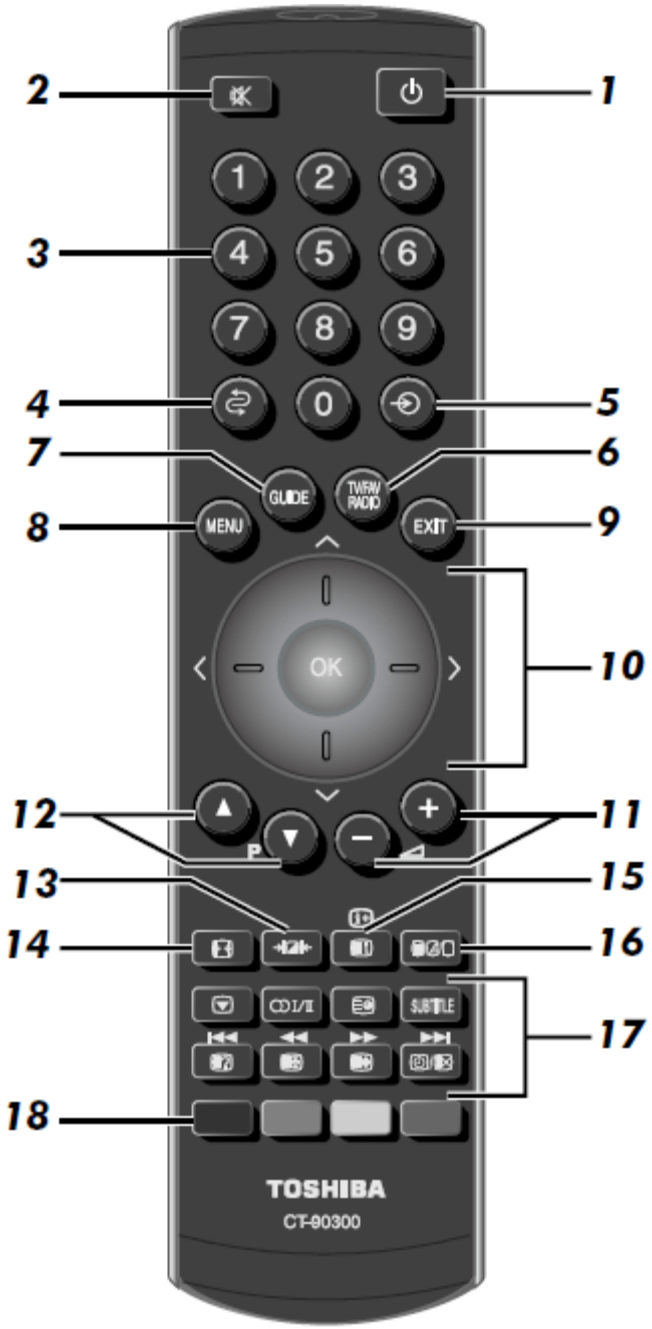

1 For On/Standby mode

2 To mute the sound

3 Number buttons

4 To return to the previous programme

5 To select input from external sources, **analogue** or **digital** TV

6 To display TV, Radio and Favourite programme list when in **digital** mode

7 To display the **digital** on-screen Programme Guide

8 On-screen Menus

9 To exit Menus

10 When using menus press ∧ (up), ∨ (down), < (left) and > (right) to move the cursor on the screen. OK to confirm your selection

11 To alter the volume

12 To change programme positions and text pages

13 Selectable picture preferences

14 Widescreen viewing

15 To display on-screen information

16 To call up text services in **analogue** mode and interactive services in **digital** mode

17 **When in TV mode:**

▼	Still picture
I/II	Stereo/bilingual transmissions
SUBTITLE	Digital Subtitles
⏻/EX	Time display

When using the Programme Guide:

⏮ – 24 hours
⏭ + 24 hours
◀◀ – 1 page
▶▶ + 1 page

18 Text and interactive service control buttons

FUNCTION AND OPERATION

Using the Controls

Whilst all the necessary adjustments and controls for the television are made using the remote control, the buttons on the television may be used for some functions.

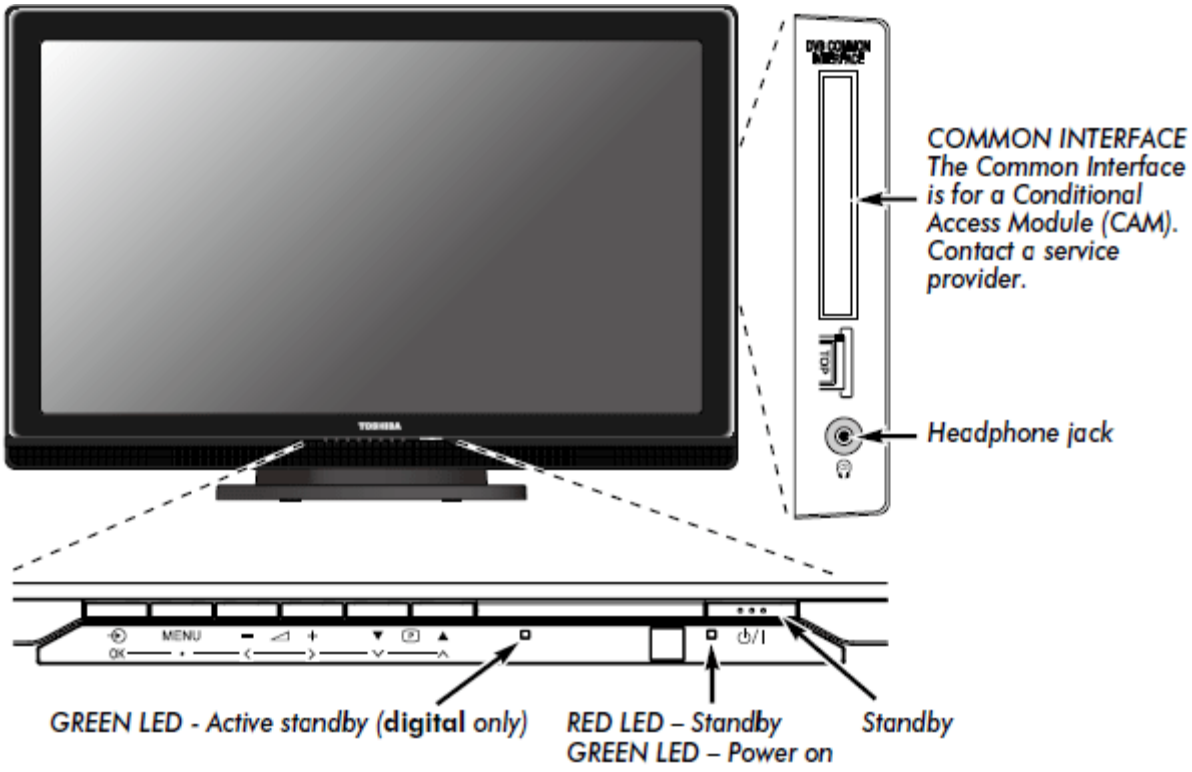

Switching On

If the RED LED is unlit check that the mains plug is connected to the power supply. If the picture does not appear press ⏻ on the remote control, it may take a few moments. The GREEN LED will be lit.

To put the television into Standby press ⏻ on the remote control. To view the television press ⏻ again. The picture may take a few seconds to appear.

Using the Remote Control

Press (MENU) on the remote control to see the menus.

The menu appears as a list of five topics. As each symbol is selected by pressing < or > on the navigation ring on the remote control, its respective options will appear below.

NOTE: The same menu is displayed in DTV (Digital TV) and ATV (Analogue TV) modes; however some items are greyed out in each case.
To use the options, press ∧ and ∨ on the remote control to move up and down through them and (OK), < or > to select the required choice. Follow the on-screen instructions. The functions of each menu are described in detail throughout the manual.

Using the Controls

To alter the volume press – ◿ +.

To alter the programme position press ▼ (P) ▲.

Press **MENU** and <, >, ∧ or ∨ to control the sound and picture options.

Press **MENU** to finish.

To select an external input, press ⊖ until the appropriate input source is selected.

Please always refer to the owner's manual of the equipment to be connected for full details.

Please note: Inserting the headphone plug will mute the sound from all speakers.

FUNCTION AND OPERATION

Startup Application

Before switching on the television put your decoder and media recorder to **Standby** if they are connected.
To set up the television use the buttons on the remote control as detailed.

Quick Setup

1. Press the ⏻ button. The **Quick Setup** screen will appear. This screen will appear the first time that the television is switched on and each time "**Reset TV**" is executed.

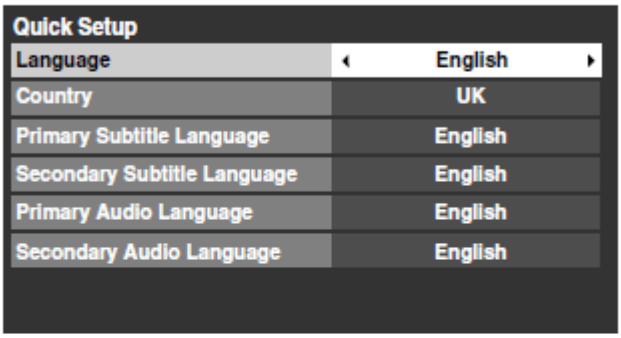

2. Press ∨ to hightlight **Language** and < or > to select the menu language.

3. Press ∨ to highlight **Country** and < or > to select. The television will now tune the stations for your country.

4. Press (OK). Use < or > to select **ATV and DTV**, **ATV** or **DTV**. To execute **Auto Tuning** press (OK) again.

   The television will start to search for available ATV and/or DTV channels. The progress bar will indicate the scan status.

You must allow the television to complete the search.

Auto Tuning		
	Progress	Found
ATV tune	6%	0
DTV tune	0%	0
	Channel: S41 Station:	

When the search is complete the television will automatically select programme one.

The **Auto Tuning** results screen will display the services that are found.

Auto Tuning

ATV ▸ DTV

Prog.	Name		Ch
0	VCR		60
1			2
2			10
3			7
4			40
5			22

5 Press < or > to view the **DTV** (digital channel) or **ATV** (analogue channel) lists.

Auto Tuning

ATV ◂ DTV

Prog.	Name	Type	Ch
1	BBC ONE		25
2	BBC TWO		25
7	BBC THREE		25
30	CBBC Channel		25
40	BBC NEWS 24		25
51	BBCi		25

6 Use ∨ or ∧ to move through the list to select a programme then press (OK) to view.

NOTE: The time will be set automatically by transmission but can be advanced or decreased by up to 3 hours using **Local Time Setting** in the **DTV Settings** menu.

PLEASE NOTE

The **Quick Setup** menu can also be displayed at any time from the **SETUP** menu.

Auto Tuning

NOTE: As new services are broadcast it will be necessary to re-tune the television in order to view them.

Auto Tuning *will completely re-tune the television and can be used to up date the channel list.*
It is recommended that Auto Tuning is run periodically to ensure that all new services are added. *All current programmes and settings, i.e. favourites and locked programmes, will be lost.*

1 Press (MENU) and use < or > to select **SETUP** menu. Use ∨ to highlight **Auto Tuning**. Press (OK).

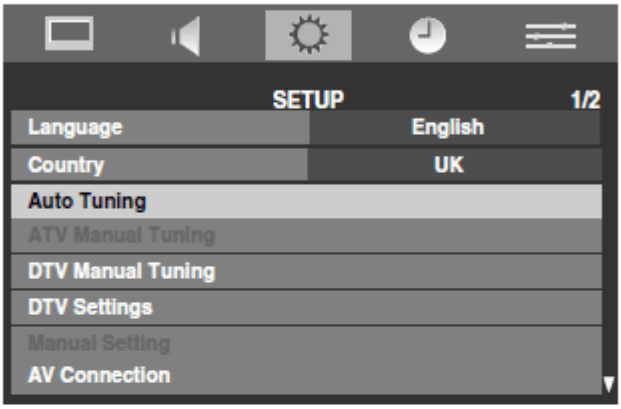

2 A screen will appear warning that previous programmes and settings will be deleted.

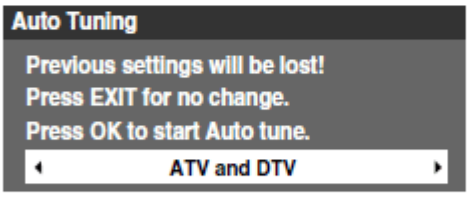

Use < or > to select **ATV and DTV**, **ATV** or **DTV**, then press (OK) to continue with the **Auto Tuning**.

The television will start to search for all available ATV and/or DTV stations.

You must allow the television to complete the search.

When the search is complete the **Auto Tuning** screen will display the services found.

3 Use ∨ or ∧ to move through the list to select a programme then press (OK) to view.

Auto Programme Update

If the **Auto Programme Update** is set to **On**, when the TV is in standby mode, the Digital Tuning is automatically executed and new programmes are memorized.

1. Press (MENU), and select **SETUP** menu.
2. Use ∨ to highlight **DTV Settings** and press (OK).
3. Press ∨ to select **Auto Programme Update** and use < or > to select **On**.

Analogue switch-off

This is a **digital** television which is integrated to allow the use of both **digital** and **analogue** services. However, during the lifetime of this set it is very likely that **analogue** services will be switched off to allow for more new **digital** services.

This 'switch-off' will happen in a number of phases, which will be advertised in your area well in advance. It is recommended that at each phase the television is re-tuned to ensure that existing and new **digital** services can be viewed without disruption.

DTV Settings

Programmes

The station order may be changed to suit your personal preference.

1. Press (MENU), and select **SETUP** menu.
2. Use ∨ to highlight **DTV Settings** and press (OK).
3. Select **Programmes** from the **DTV Settings** menu and press (OK).

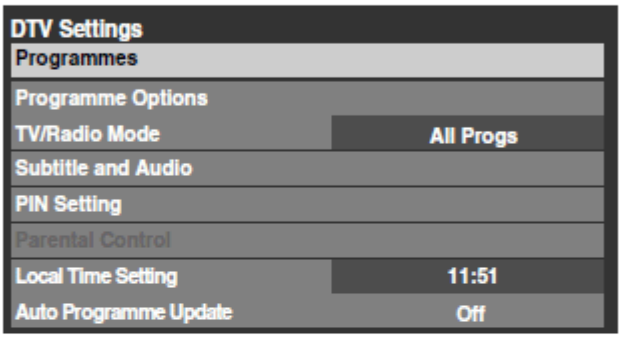

4. With the list of stations now showing use ∨ or ∧ to highlight the station you want to *move* and press (OK).

5. Use ∨ or ∧ to move through the list to your *preferred* position. As you do so the other stations will move to make room.

6 Press (OK) to store your move. Repeat as necessary, then press (EXIT).

The Skip setting for the highlighted programme can be switched between "Set/Not Set" by pressing the **RED** button on the remote control. This feature allows you to set channels that will be skipped when **P▼** or **P▲**. However, these channels will still be available by direct number entry (when tuned a icon will be displayed in the banner to indicate as a skipped channel).

DTV Manual Tuning

This feature is available for service engineers or can be used for direct channel entry if the multiplex channel is known.

1. Select **DTV Manual Tuning** from the **SETUP** menu and press (OK).

2. Enter the multiplex number using the number buttons or use < or > to adjust the number up or down and then press (OK). The television will automatically search for that multiplex.

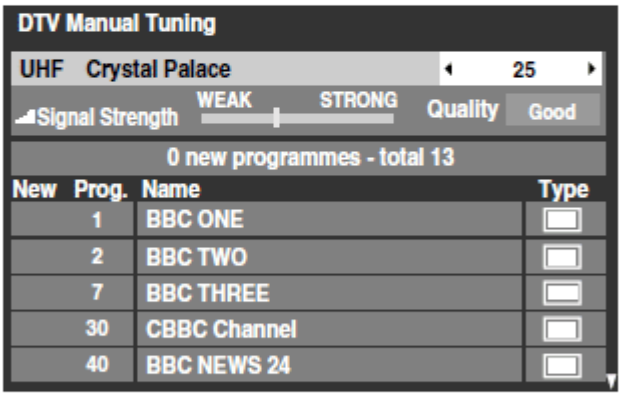

When the multiplex is found any channels that are not currently on the programme list will be added and the programme information at the top of the screen will be updated.

3. Repeat as necessary. Press (EXIT) to finish.

FUNCTION AND OPERATION

ATV Manual Tuning

Tuning

The television can be tuned-in manually using **ATV Manual Tuning**. For example: if the television cannot be connected to a media recorder/decoder with a SCART lead or to tune-in a station on another **System**.

Use < and > to move across the screen and select any of the ATV Manual Tuning options. Then use ∧ or ∨ to adjust the settings.

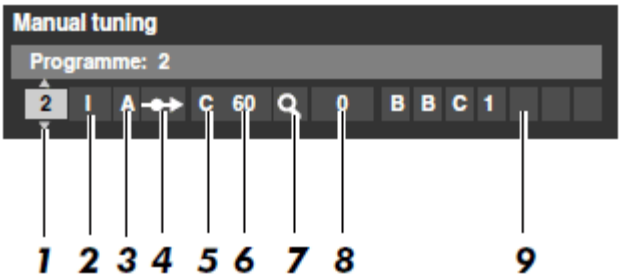

1 **Programme:**

The number to be pressed on the remote control to tune the programme.

2 **System:**

Specific to certain areas.

3 **Colour System:**

Factory set to Auto, should only be changed if problems are experienced, i.e. NTSC input from external source.

4 **Skip:**

means skip OFF.
means nothing has been stored or the facility to skip the channel is ON.

5 **Signal Class:**

The channel classification.

6 **Channel:**

The channel number on which a station is being broadcast.

7 **Searching:**

Search up and down for a signal.

8 **Manual fine tuning:**

Only used if interference/weak signal is experienced.

9 **Station:**

Station identification. Use the ∧ or ∨ and < or > buttons to enter up to seven characters.

To allocate a programme position on the television for a decoder and media recorder: turn the decoder on, insert a pre-recorded film in the media recorder and press PLAY, then manually tune.

1 Press (MENU) and using < or > select the **SETUP** menu. With ∨ highlight **ATV Manual Tuning** and press (OK) to select.

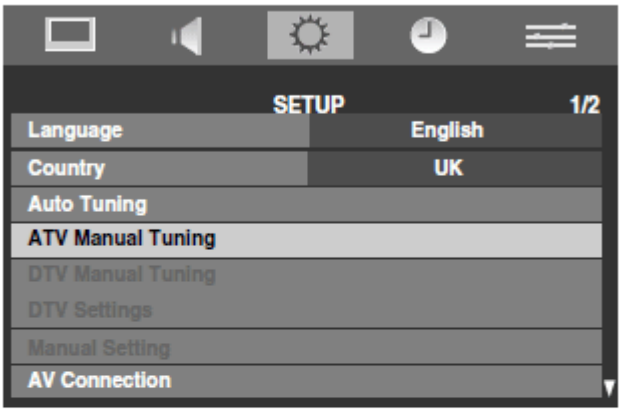

2 Use ∧ or ∨ to highlight the programme position required e.g. we suggest ***Prog. 0*** for a media recorder.

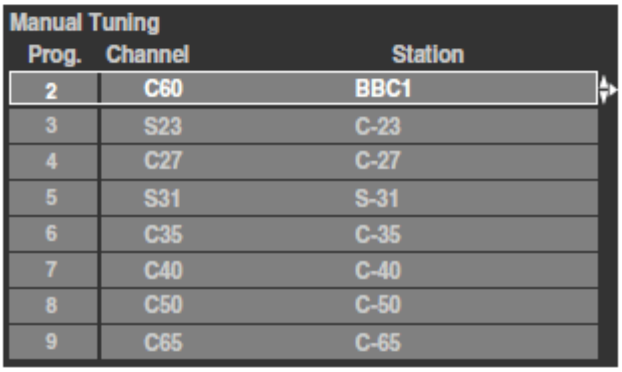

Different **Channel** numbers may be displayed.

3 Press (OK) to select. If the programme is skipped, **Skip** must be removed before storing.

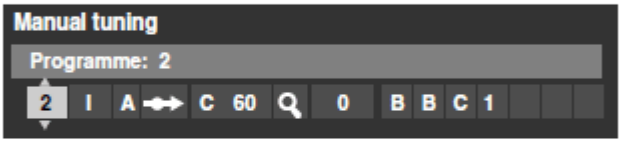

4 Press > to select **System** and use ∧ or ∨ to change if required.

5 Then press > to select **Searching**.

6 Press ∧ or ∨ to begin the search. The search symbol will flash.

7 Each signal will show on the television, if it is not your media recorder, press ∧ or ∨ again to restart the search.

8 When your media recorder signal is found, press > to move along to **Station**. With ∧, ∨, < and > put in the required characters, e.g. **VCR**.

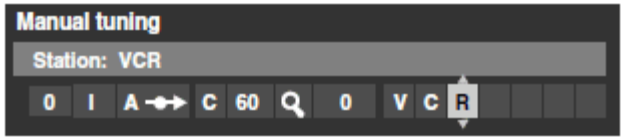

9 Press (OK) to store.

10 Repeat for each ***programme position*** you want to tune or, press (MENU) to return to the list of channels and select the next number to tune.

11 Press (EXIT) when you have finished.

To name external equipment:

12 To name external equipment, e.g. DVD on EXT2, press ⊖ to select ⊖2, then select **Manual Setting** from the **SETUP** menu.

13 Press > to select **Label** then using ∧, ∨, < and > put in the required characters.

PLEASE NOTE

This television has direct channel entry if the channel numbers are known.
Select the **ATV Manual Tuning** screen in ***Step 3***.
Enter the **Programme number**, the **System**, then **C** for standard (terrestrial) channels or **S** for cable channels and the **Channel** number. Press (OK) to store.

FUNCTION AND OPERATION

Software Upgrade

Version

This feature can be used to check the version of software currently installed.

1. From the **SETUP** menu press ^ or v to select **System Information**.

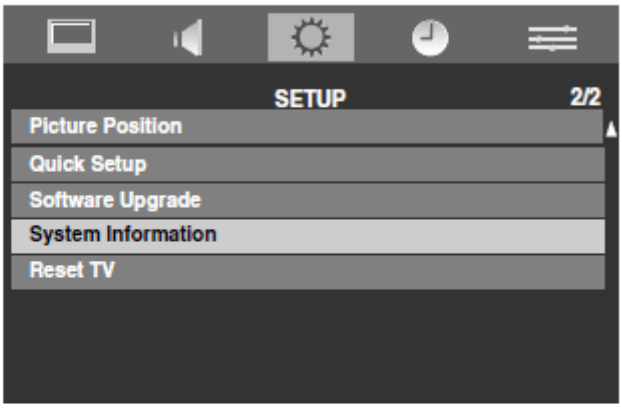

2. Press (OK) to display the **Software Version**.

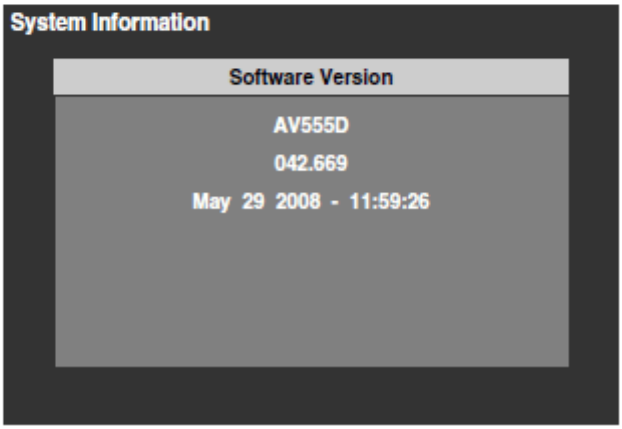

Auto Upgrade

*When **Auto Upgrade** is set to **On** (default setting), the television will automatically upgrade while in standby if new software is available.*

1. From the **SETUP** menu press ∧ or ∨ to select **Software Upgrade** and press (OK).

2. Press ∨ to select **Auto Upgrade**.

3. Use < or > to select **On** or **Off**.

Searching for New Software

*If preferred, software upgrades can be searched for manually using **Search for New Software**.*

1. In the **Software Upgrade** menu press ∧ or ∨ to select **Search for New Software**.

2. Press (OK). The television will automatically start searching for a software upgrade, the progress bar will move along the line.

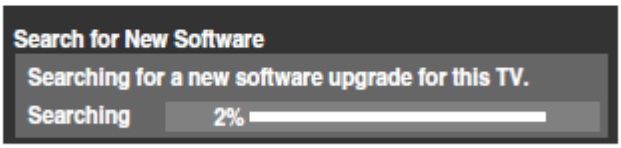

If an upgrade is found the television will automatically start downloading. If not, a screen will appear stating that an upgrade is unavailable.

Reset TV

*Selecting **Reset TV** will reset all TV settings, including stored channels, to their original factory values.*

1. In the **SETUP** menu press ∨ until **Reset TV** is highlighted.

2. Press (OK) to select. A screen will appear warning that all settings will be lost. Press (OK) to continue.

   When the set powers back on, the **Quick Setup** screen will appear. Press (OK) to continue, the television will then auto tune.

SPECIFICATION

DVB-T Broadcast systems/channels		Broadcast systems/channels	
UK	UHF 21-68	PAL-I	UHF UK21-UK69
France	VHF 05-10 (VHF 01-05) UHF 21-69	PAL-B/G	UHF E21-E69 VHF E2-E12, S1-S41
Germany	VHF 05-12 UHF 21-69	SECAM-L	UHF F21-F69 VHF F1-F10, B-Q
Austria	VHF 05-12 UHF 21-69	SECAM-D/K	UHF R21-R69 VHF R1-R12
Switzerland	VHF 05-12 UHF 21-69		
Italy	VHF 05-12 (D,E,F,G,H,H1,H2) UHF 21-69		
Spain	UHF 21-69		
Nederlands	VHF 05-12 UHF 21-69		
Sweden	VHF 05-12 UHF 21-69		
Finland	VHF 05-12 UHF 21-69		
Greece	VHF 05-12 UHF 21-69		

Video Input PAL, SECAM, NTSC 3.58/4.43

External connections

EXT1	Input/Output	21-pin SCART	RGB, A/V
EXT2	Input/Output	21-pin SCART	A/V, S-video
EXT3	Input	Phono jacks Phono jacks	Y, P_B/C_B, P_R/C_R Audio L + R
EXT4	Input	Phono jack Phono jacks	Video Audio L + R
HDMI 1/2	Input	HDMI™ (Audio LIP SYNC supported)	
HDMI1 Audio		Phono jacks	Audio L + R

Stereo		Nicam 2 carrier system	
Visible Screen Size (approx.)	Model	32 37 42	80cm 94cm 107cm
Display		16:9	
Sound output (at 10% distortion)		Main 10W + 10W	
Power consumption as specified in EN60107-1 : 1997	Model	32 37 42	112W 149W 195W
Standby (approx.)	Model	32 37 42	0.9W 0.9W 0.9W
Dimensions (approx.)	Model	32 37 42	55cm (H) 80cm (W) 22cm (D) 62cm (H) 91cm (W) 25cm (D) 68cm (H) 101cm (W) 26cm (D) *(Height dimension includes foot stand)*
Weight (approx.)	Model	32 37 42	14.0 kg 18.0 kg 20.0 kg
Headphone socket		3.5mm stereo	
Operating condition		Temperature 5°C - 35°C (41°F - 94°F) Humidity 20 - 80% (non-condensing)	
Accessories		Remote control 2 batteries (AAA, IEC R03 1.5V)	